Washdown Duty Products

BALDOR®

Why Baldor?

For more than 85 years, Baldor has strived to provide customers with the best value and reliability in industrial electric motors. That dedication shows in customer preference for Baldor motors. To be considered as the most preferred...

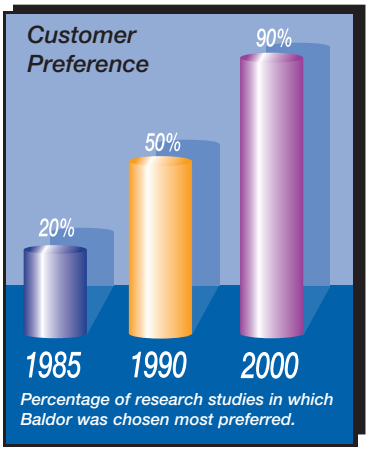

Baldor offers the industry's broadest line of stock products. Save valuable time with just one call to Baldor. We offer more than 7,000 stock motors, drives and gearboxes.

Energy-efficiency leader. We began lowering the energy consumption of our motors in the 1920s, long before others were even talking about it. Today, our expansive line of Super-E® premium-efficient motors ranges from 1 through 1250 hp. Baldor's Super-E® line offers customers the highest overall efficiency levels in the industry.

Baldor products are available at more locations than any other brand. Our 35 district offices/warehouses across North America offer immediate availability of Baldor products to thousands of customers.

Continuous innovation to improve reliability. Baldor leads the motor industry in applying new technologies and materials to improve motor reliability. Recent improvements to the line of Washdown Duty motors are further proof that Baldor is the leader in motors for food and pharmaceutical processing and handling applications. These improvements are explained in detail on the following pages.

Industry's best information. Only Baldor offers customers so many choices for product information with a wide variety of catalogs and product brochures, a CD-ROM electronic catalog, the Baldor Web site (www.baldor.com), or you may talk to a Baldor customer service person at one of our sales offices.

Industry's shortest lead times/Flexible manufacturing. Baldor has the industry's shortest lead times on custom motors – just two weeks. Our unique FLEX FLOW™ manufacturing process lets us produce any order in any quantity, quickly and efficiently.

Table of Contents

The Best Value in Washdown Duty Motors and Drives

Long before we invested in the people, equipment and material required to produce Baldor Washdown Duty motors and drives, we invested our time and attention. We listened to equipment designers, operators and plant maintenance engineers. We learned about their toughest processing applications in poultry, meat, dairy, snack foods and pharmaceuticals. And we took notes when they shared their wish lists of product capabilities and characteristics.

That was over 1,000,000 Washdown Duty motors ago, and we're still listening to customer input.

Today's input: better performance and reliability. These are the inspirations behind Baldor's new and improved Washdown Duty motors. We accomplished this by adding features like an improved paint system, Baldor's ISR Inverter Spike Resistant™ magnet wire, Class F insulation with Class B (or lower) temperature rise, and Exxon Polyrex® EM grease, customer-friendly drain plugs, and shaft seals.

Features, choice and availability make Baldor Washdown Duty motors and drives the best value.

- Baldor's Washdown, Paint-Free Washdown and Stainless Washdown are suited for applications requiring high-pressure cleaning with caustic solution. These choices allow you to select the right motor for the amount of protection required for the specific application.

- The widest variety of Washdown Duty motors available from stock. Motors may be selected with the required voltage, horsepower, speed and mounting for the application. Plus, Baldor offers your choice of permanent magnet DC, Baldor SmartMotor™ and Servo motors with Washdown Duty construction.

Baldor Washdown Duty Motors provide easy clean up for Hiram Walker's high speed, bottle filling line. The line fills Kahlua bottles at a rate of 300 bottles per minute.

- Our Super-E premium efficiency designs meet or exceed NEMA Premium® efficiency levels, provide energy savings, lower temperature rise and increased motor life.

- The autophoretic primer and epoxy paint system on our Washdown Duty motors passes 500 hours in a salt spray booth per ASTM B117.

- Totally Enclosed Non-Ventilated (TENV) Inverter Drive® and Vector Drive® washdown motors are designed and tested for use with adjustable speed controls to ensure maximum performance and adequate cooling over the motor's entire speed range.

- Super-E Washdown Duty motors are Inverter Ready and meet NEMA MG 1-2003, Part 31 requirements for peak voltage when used on inverters.

- If the motor you need is not one we stock, Baldor can build your custom motor in only two weeks! Custom capabilities include mountings, conduit boxes, shaft configurations, special voltages and frequencies.

There are many other advantages to specifying Baldor Washdown Duty motors and drives. You'll find them on the following pages, as well as all the specs you need to make the perfect choice for your application.

SSE™ Washdown Duty All Stainless Motor Features

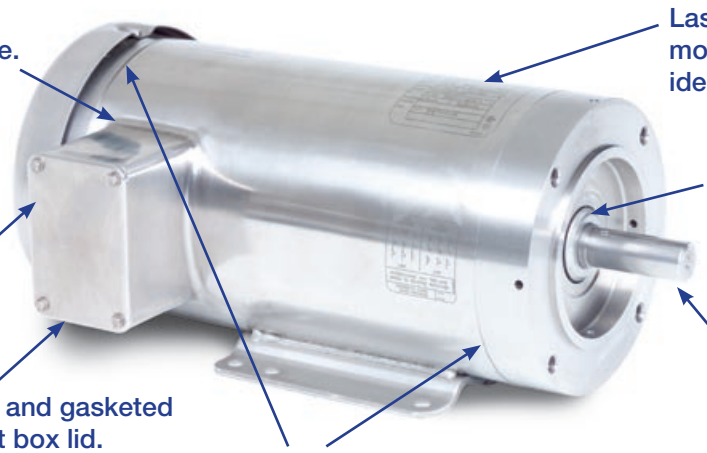

Features	Benefits
All-stainless steel construction including: housing, conduit box and cover, shaft, base, fan cover and slinger.	Impervious to rust and deterioration caused by frequent high-pressure caustic sanitizing. Provides longer life than conventional motors.
Premium external and internal bearing protection with patent-pending mechanical seals.	Prevents water, moisture and debris from entering the motor and around the shaft extension. Eliminates breakdown of grease, providing longer life.
Encapsulated windings and conduit box, utilizing Baldor's new E3 Effusion Epoxy Encapsulation™ process.	Prevents any moisture from reaching the windings, whether originating from ingress or condensation. Permanently seals the lead entrance to the conduit box.
Conduit box welded to the motor housing.	Provides a leak-proof seal between conduit box and the frame. No gasket is required.
New hydrophobic aspiration system eliminates condensation moisture in the motor.	Eliminates the need for drains as used in conventional washdown duty motors. No need to move drains to the lowest point when mounting the motor in different positions.
Baldor Super-E design with efficiency levels at or above NEMA Premium®.	Lowest cost of operation saves electricity in high production processing plants while providing reduced downtime, cooler operation and longer life.
"Inverter-ready" with Baldor ISR® Inverter Spike Resistant magnet wire and insulation system makes motor Inverter-Ready.	Allows operation adjustable speed drives to further increase efficiency on fans, pumps and in-process control applications. Combined with new E3 encapsulation to reduce potential corona damage.
Complete nameplate data laser etched on the motor frame, identification numbers on both sides.	No contamination can collect behind a bolt-on nameplate. Allows easy identification regardless of viewing position while mounted to machinery.
UL and CSA approved, meets CE directives.	Approved by UL E46145 and CSA LR2262 files. Complies with CE as well as RoHS and WEEE directives.
Custom motor capabilities with 2 week lead times.	Allows for special electrical or mechanical configurations such as 50 Hz and IEC mountings.

Super-E® Washdown Duty Stainless Motors

NEMA Premium

NEW!

Over the years, Baldor has worked with industry leaders in food processing to design washdown duty motors that meet and exceed their application demands.

Our new Stainless Super-E® washdown duty motors are another example of the best getting better. Baldor's SSE™ Stainless Super-E® is designed to perform longer than any other industrial electric motor available today, in the most corrosive and caustic applications subjected to frequent high-pressure sanitizing.

With unmatched quality and superior reliability, Baldor's new SSE Stainless Super-E motors have again set the standard that all other washdown duty motors will be judged against.

Performance Data: TEFC - Totally Enclosed Fan Cooled, TENV - Totally Enclosed Non-Ventilated, 230/460 Volts, Three Phase, 1 through 10 Hp

Hp	kW	RPM	Frame	Catalog No.	Amps @ High V		Full Load Torque Lb. Ft.	Efficiency %			Power Factor %			Bearings		Volt Code	"C" Dim.	Conn. Diag. No.
					Full Load	Locked Rotor		1/2	3/4	Full Load	1/2	3/4	Full Load	DE	ODE			
Super-E C-face with base																		
0.5	0.37	3450	56C	CSSEWDM3537 ▮	0.8	5.7	.75	62	68.5	72	68	77	82	6205	6205	E	11.71	CD0005
0.5	0.37	1750	56C	CSSEWDM3538 ▮	0.8	6.3	1.5	79.7	82.3	82.5	52	65	73	6205	6205	E	11.71	CD0005
0.75	0.55	3450	56C	CSSEWDM3541 ▮	1.0	9.7	1.13	74.5	78.7	80	73	82	86	6205	6205	E	11.71	CD0005
0.75	0.55	1750	56C	CSSEWDM3542 ▮	1.1	9.6	2.25	73.9	78.3	80	63	76	84	6205	6205	E	12.71	CD0005
1	0.75	3450	56C	CSSEWDM3545 ▮	1.4	18.3	1.5	76.8	81.5	82.5	61	73	80	6205	6205	E	12.71	CD0005
1	0.75	1740	56C	CSSEWDM3546 ▮	1.4	12.2	3.0	86.9	87.8	86.5	57	70	78	6205	6205	E	12.71	CD0005
1	0.75	1740	143C	CSSEWDM3546T ▮	1.4	12.2	3.0	86.9	87.8	86.5	57	70	78	6205	6205	E	12.71	CD0005
1.5	1.1	3500	56C	CSSEWDM3550 ▮	1.8	20.6	2.3	82.3	85.2	85.5	77	86	90	6205	6205	E	13.59	CD0005
1.5	1.1	3500	145TC	CSSEWDM3550T ▮	1.8	20.6	2.3	82.3	85.2	85.5	77	86	90	6205	6205	E	13.65	CD0005
1.5	1.1	1740	56C	CSSEWDM3554 ▲	2.0	17.6	4.5	87.7	83.3	86.5	61	74	81	6205	6205	E	14.77	CD0005
1.5	1.1	1740	145TC	CSSEWDM3554T ▲	2.0	17.6	4.5	87.7	88.3	86.5	61	74	81	6205	6205	E	14.83	CD0005
2	1.5	3500	145TC	CSSEWDM3555T ▲	2.5	31.0	3.0	83.7	86.0	86.5	76	85	90	6205	6205	E	14.83	CD0005
2	1.5	1725	145TC	CSSEWDM3558T ▲	2.7	19.6	6.0	87.9	88.3	86.5	64	76	82	6205	6203	E	14.83	CD0005
3	2.2	3470	145TC	CSSEWDM3559T ▲	3.7	48.3	4.5	86.3	87.2	86.5	79	87	91	6205	6205	E	16.21	CD0005
3	2.2	1760	182TC	CSSEWDM3611T ▲	4.0	32.0	9.0	89.0	90.0	89.5	63	74	80	6206	6205	F		CD0005
5	3.7	3500	184TC	CSSEWDM3613T ▲	5.6	62.5	7.5	89.0	89.9	89.5	85	92	95	6206	6205	F		CD0005
5	3.7	1750	184TC	CSSEWDM3615T ▲	6.4	54.0	15.0	90.3	90.9	90.2	62	74	81	6206	6205	E1		CD0005
7.5	5.6	3500	213TC	CSSEWDM3709T ▲	8.3	87.0	11.5	90.9	92.1	91.0	79	90	93	6307	6206	F		CD0005
7.5	5.6	1770	213TC	CSSEWDM3710T ▲	10.2	72.0	22.2	90.5	91.8	91.7	56	68	76	6307	6206	E1		CD0005
10	7.5	3500	215TC	CSSEWDM3711T ▲	10.6	115	15.0	92.0	92.4	91.7	83	91	94	6307	6206	E		CD0005
10	7.5	1760	215TC	CSSEWDM3714T ▲	12.6	83.5	30.0	91.7	92.4	91.7	62	75	81	6307	6206	E1		CD0005
Super-E C-face less base																		
0.5	.037	3450	56C	VSSEWDM3537 ▮	0.8	5.7	.75	62	68.5	72	68	77	82	6205	6205	E	11.71	CD0005
0.5	0.37	1750	56C	VSSEWDM3538 ▮	0.8	6.3	1.5	79.7	82.3	82.5	52	65	73	6205	6205	E	11.71	CD0005
0.75	0.55	3450	56C	VSSEWDM3541 ▮	1.0	9.7	1.13	74.5	78.7	80	73	82	86	6205	6205	E	11.71	CD0005
0.75	0.55	1750	56C	VSSEWDM3542 ▮	1.1	9.6	2.25	73.9	78.3	80	63	76	84	6205	6205	E	11.71	CD0005
1	0.75	3450	56C	VSSEWDM3545 ▮	1.4	18.3	1.5	76.8	81.5	82.5	61	73	80	6205	6205	E	12.71	CD0005
1	0.75	1740	56C	VSSEWDM3546 ▮	1.4	12.2	3.0	86.9	87.8	86.5	57	70	78	6205	6205	E	12.71	CD0005
1	0.75	1740	143C	VSSEWDM3546T ▮	1.4	12.2	3.0	86.9	87.8	86.5	57	70	78	6205	6205	E	12.71	CD0005
1.5	1.1	3500	56C	VSSEWDM3550 ▮	1.8	20.6	2.3	82.3	85.2	85.5	77	86	90	6205	6205	E	13.59	CD0005
1.5	1.1	3500	145TC	VSSEWDM3550T ▮	1.8	20.6	2.3	82.3	85.2	85.5	77	86	90	6205	6205	E	13.65	CD0005
1.5	1.1	1750	56C	VSSEWDM3554 ▲	2.0	17.6	4.5	87.7	88.3	86.5	61	74	81	6205	6205	E	14.77	CD0005
1.5	1.1	1740	145TC	VSSEWDM3554T ▲	2.0	17.6	4.5	87.7	88.3	86.5	61	74	81	6205	6205	E	14.83	CD0005
2	1.5	3500	145TC	VSSEWDM3555T ▲	2.5	31.0	3.0	83.7	86.0	86.5	76	85	90	6205	6205	E	14.83	CD0005
2	1.5	1725	145TC	VSSEWDM3558T ▲	2.7	19.6	6.0	87.9	88.3	86.5	64	76	82	6205	6203	E1	14.83	CD0005

NOTE: Volt Code: E = 208-230/460V, 60Hz; E1 = 230/460V, 60Hz, usable at 208V; F = 230/460V, 60 Hz.
See page 45 for Connection Diagrams. Efficiencies shown are nominal.
Data subject to change without notice. Contact Baldor for certified data.

▮ = TENV Enclosure - See page 26 for dimensions.
▲ = TEFC Enclosure - See page 26 for dimensions.

All Stainless Motors

In applications where additional protection is required against highly corrosive environments, Baldor's All Stainless Washdown Duty motors are the answer. Typical applications include outdoor installations, or applications where particularly corrosive agents are being processed or used for washdowns, as in pharmaceuticals. Features include 300 Series stainless steel on all external surfaces, encapsulated windings, and a labyrinth seal on both ends of the shaft extension to protect motor bearings by rotating and expelling contaminants.

Performance Data: TEFC - Totally Enclosed Fan Cooled, TENV - Totally Enclosed Non-Ventilated, 230/460 Volts, Three Phase, 1 through 10 Hp

Hp	kW	RPM	Frame	Catalog No.	Amps @ High V		Full Load Torque Lb. Ft.	Efficiency %			Power Factor %			Bearings		Volt Code	"C" Dim.	Conn. Diag. No.
					Full Load	Locked Rotor		1/2	3/4	Full Load	1/2	3/4	Full Load	DE	ODE			
C-face with base																		
0.5	0.37	3450	56C	CSSWDM3537 ▮	0.9	6.0	.75	59.6	66.9	70.0	62	72	76	6205	6203	E	11.09	CD0005
0.5	0.37	1750	56C	CSSWDM3538 ▮	0.8	6.5	1.5	68.3	73.6	82.5	56	68	76	6205	6203	E1	11.09	CD0005
0.75	0.56	3450	56C	CSSWDM3541 ▮	1.1	11.7	1.1	74.4	78.7	80.0	63	73	80	6205	6203	E1	11.09	CD0005
0.75	0.56	1750	56C	CSSWDM3542 ▮	1.0	9.6	2.3	77.3	77.5	78.5	61	71	80	6205	6203	E	12.09	CD0005
1	0.75	3450	56C	CSSWDM3545 ▮	1.3	18.3	1.5	80.5	83.1	82.5	69	82	88	6205	6203	F	11.09	CD0005
1	0.75	1740	56C	CSSWDM3546 ▮	1.4	10.7	3.0	86.3	87.0	85.5	62	74	81	6205	6203	E	12.09	CD0005
1.5	1.1	3500	56C	CSSWDM3550 ▮	2.0	23.5	2.3	82.5	85.2	85.5	71	81	87	6205	6203	F	12.09	CD0005
1.5	1.1	1750	145TC	CSSWDM3554T ▲	2.1	20.0	4.5	85.0	86.2	85.5	61	74	80	6205	6203	E	13.42	CD0005
2	1.5	3450	145TC	CSSWDM3555T ▲	2.6	30.0	3.0	78.7	82.5	84.0	73	83	87	6205	6203	E	14.30	CD0005
2	1.5	1725	145TC	CSSWDM3558T ▲	2.8	22.0	6.1	85.8	86.5	84.0	57	71	78	6205	6203	F	13.42	CD0005
3	2.2	3450	145TC	CSSWDM3559T ▲	3.7	40.5	4.5	82.8	85.1	85.5	78	86	89	6205	6203	E1	13.42	CD0005
3	2.2	1760	182TC	CSSWDM3611T ▲	4.1	32.0	9.0	86.9	88.2	87.5	51	63	77	6206	6205	E	16.82	CD0005
5	3.7	3450	184TC	CSSWDM3613T ▲	5.7	64.0	7.5	86.6	88.2	87.5	83	91	93	6206	6205	E	16.82	CD0005
5	3.7	1750	184TC	CSSWDM3615T ▲	6.5	48.0	15.0	88.3	88.4	87.5	61	73	80	6206	6205	E	18.32	CD0005
7.5	5.6	3525	213TC	CSSWDM3709T ▲	8.9	75.0	11.2	86.6	88.4	88.5	78	85	88	6307	6206	E	19.03	CD0005
7.5	5.6	1760	213TC	CSSWDM3710T ▲	10.0	82.0	22.0	82.1	84.7	89.5	61	73	80	6307	6206	E	20.16	CD0005
10	7.5	3450	215TC	CSSWDM3711T ▲	11.9	115	14.9	88.2	89.4	89.5	78	85	88	6307	6206	E	20.16	CD0005
10	7.5	1760	215TC	CSSWDM3714T ▲	13.0	119	29.9	86.4	88.8	89.5	61	73	76	6307	6206	E	20.91	CD0005
C-face less base																		
0.5	0.37	3450	56C	VSSWDM3537 ▮	0.9	6.0	.75	59.6	66.9	70.0	62	72	76	6205	6203	E	11.09	CD0005
0.5	0.37	1750	56C	VSSWDM3538 ▮	0.8	6.5	1.5	68.3	73.6	75.5	56	68	76	6205	6203	E1	11.09	CD0005
0.75	0.56	3450	56C	VSSWDM3541 ▮	1.1	11.7	1.1	74.4	78.7	80.0	63	73	80	6205	6203	E	11.09	CD0005
0.75	0.56	1750	56C	VSSWDM3542 ▮	1.0	9.6	2.3	74.3	77.5	78.5	61	71	80	6205	6203	E	12.09	CD0005
1	0.75	3450	56C	VSSWDM3545 ▮	1.3	12.4	1.5	80.5	83.1	82.5	69	82	88	6205	6203	F	11.09	CD0005
1	0.75	1740	56C	VSSWDM3546 ▮	1.4	10.7	3.0	86.3	87.0	85.5	62	74	81	6205	6203	E	12.09	CD0005
1.5	1.1	3500	56C	VSSWDM3550 ▮	2.0	23.5	2.3	82.5	85.2	85.5	71	81	87	6205	6203	F	12.09	CD0005
1.5	1.1	1750	145TC	VSSWDM3554T ▲	2.1	20.0	4.5	85.0	86.2	85.5	61	74	80	6205	6203	E	13.42	CD0005
2	1.5	3450	145TC	VSSWDM3555T ▲	2.6	30.0	3.0	78.7	82.5	84.0	73	83	87	6205	6203	E	14.30	CD0005
2	1.5	1725	145TC	VSSWDM3558T ▲	2.8	22.0	6.0	85.8	86.5	84.0	57	71	78	6205	6203	F	13.42	CD0005
3	2.2	3450	145TC	VSSWDM3559T ▲	3.7	37.5	4.5	82.8	85.1	85.5	78	86	89	6205	6203	E1	13.42	CD0005
3	2.2	1760	182TC	VSSWDM3611T ▲	4.1	31.2	9.0	86.9	88.2	87.5	51	63	77	6206	6205	E	16.82	CD0005
5	3.7	3450	184TC	VSSWDM3613T ▲	5.7	64.0	7.5	86.6	88.2	87.5	83	91	93	6206	6205	E	16.82	CD0005
5	3.7	1750	184TC	VSSWDM3615T ▲	6.5	48.0	15.0	88.3	88.4	87.5	61	73	80	6206	6205	E	18.32	CD0005

NOTE: Volt Code: E = 208-230/460V, 60Hz; E1 = 230/460V, 60Hz, usable at 208V; F = 230/460V, 60 Hz.
See page 45 for Connection Diagrams. Efficiencies shown are nominal.
Data subject to change without notice. Contact Baldor for certified data.

▮ = TENV Enclosure - See page 26 for dimensions.
▲ = TEFC Enclosure - See page 26 for dimensions.

NEMA Premium

Paint Free Motors

Baldor "Paint-Free" Washdown Duty motors are designed for applications where use of caustic cleaning solutions and regular high-pressure wash downs may compromise the surface of a painted motor. Features include special processed cast endplates; 300 Series stainless steel motor frame, base, shaft and hardware; encapsulated windings; and a labyrinth seal on the drive end shaft extension to protect motor bearings by rotating and expelling contaminants. CES and VES motors are Super-E® with NEMA Premium® efficiency and 3-year warranty.

Performance Data: TEFC - Totally Enclosed Fan Cooled, TENV - Totally Enclosed Non-Ventilated, 230/460 Volts, Three Phase, 1 through 10 Hp

Hp	kW	RPM	Frame	Catalog No.	Amps @ High V		Full Load Torque Lb. Ft.	Efficiency %			Power Factor %			Bearings		Volt Code	"C" Dim.	Conn. Diag. No.
					Full Load	Locked Rotor		1/2	3/4	Full Load	1/2	3/4	Full Load	DE	ODE			
Paint Free Super-E																		
1	0.75	1740	56C	CESWDM3546 ▮	1.4	10.7	3.0	86.3	87.0	85.5	62	74	81	6205	6203	E	12.07	CD0005
1.5	1.1	1740	145TC	CESWDM3554T ▮	2.0	17.6	4.5	87.7	88.3	86.5	61	74	81	6205	6203	E1	12.95	CD0005
2	1.5	1725	145TC	CESWDM3558T ▲	2.7	19.6	6.0	88.1	88.1	86.5	66	77	82	6205	6203	E	14.19	CD0005
3	2.2	1760	182TC	CESWDM3611T ▲	4.0	33.0	9.0	88.4	89.7	89.5	61	72	78	6206	6205	E	16.56	CD0005
5	3.7	1750	184TC	CESWDM3615T ▲	6.5	53.7	15.0	89.7	90.7	90.2	62	74	80	6206	6205	E1	18.04	CD0005
7.5	5.6	1770	213TC	CESWDM3710T ▲	10.2	72.0	22.2	90.5	91.8	91.7	56	68	76	6307	6206	E1	19.81	CD0005
10	7.5	1760	215TC	CESWDM3714T ▲	15.0	104	30.0	91.0	92.2	91.7	56	70	75	6307	6206	F	21.31	CD0005
C-face with base																		
0.5	0.37	1725	56C	CSWDM3538 ▮	0.8	6.25	1.5	72.4	76.2	75.5	64	76	83	6205	6203	E	11.07	CD0005
0.75	0.56	1725	56C	CSWDM3542 ▮	1.1	8.50	2.3	77.9	79.9	80.0	55	71	81	6205	6203	E	11.07	CD0005
1	0.75	1725	56C	CSWDM3546 ▮	1.6	11.3	3.0	75.4	79.3	81.5	58	71	74	6205	6203	E	12.07	CD0005
1	0.75	1725	143TC	CSWDM3546T ▮	1.6	11.3	3.0	75.4	79.3	81.5	58	71	74	6205	6203	E	12.12	CD0005
1.5	1.1	1725	56C	CSWDM3554 ▮	2.1	18.3	4.5	78.0	81.7	82.5	65	72	82	6205	6203	E	12.24	CD0005
1.5	1.1	1725	145TC	CSWDM3554T ▮	2.1	18.3	4.5	78.0	81.7	82.5	65	72	82	6205	6203	E	13.00	CD0005
2	1.5	1725	56C	CSWDM3558 ▲	2.8	22.0	6.0	85.8	86.5	84.0	57	71	78	6205	6203	F	13.24	CD0005
2	1.5	1725	145TC	CSWDM3558T ▲	2.8	22.0	6.0	85.8	86.5	84.0	57	71	78	6205	6203	F	13.30	CD0005
3	2.2	1750	182TC	CSWDM3611T ▲	4.1	32.4	8.9	86.1	87.8	87.5	59	71	78	6206	6205	E	16.56	CD0005
5	3.7	1750	184TC	CSWDM3615T ▲	6.5	48.0	15.0	88.3	88.4	87.5	61	73	80	6206	6205	E	18.06	CD0005
7.5	5.6	1760	213TC	CSWDM3710T ▲	10.0	82.0	22.0	82.1	81.7	89.5	61	73	80	6307	6206	E	19.81	CD0005
10	7.5	1760	215TC	CSWDM3714T ▲	13.0	119	29.9	86.4	88.8	89.5	61	73	76	6307	6206	E	20.56	CD0005
Paint Free Super-E																		
1	0.75	1740	56C	VESWDM3546 ▮	1.4	10.7	3.0	86.3	87.0	85.5	62	74	81	6205	6203	E	12.07	CD0005
1.5	1.1	1740	56C	VESWDM3554 ▮	2.0	17.6	4.5	87.7	88.3	86.5	61	74	81	6205	6203	E1	12.95	CD0005
1.5	1.1	1740	145TC	VESWDM3554T ▮	2.0	17.6	4.5	87.7	88.3	86.5	61	74	81	6205	6203	E1	13.00	CD0005
2	1.5	1725	145TC	VESWDM3558T ▲	2.7	19.6	6.0	88.1	88.1	86.5	66	74	82	6205	6203	E	14.19	CD0005
C-face less base																		
0.5	0.37	1725	56C	VSWDM3538 ▮	0.8	6.25	1.5	72.4	76.2	75.5	64	76	83	6205	6203	E	11.07	CD0005
0.75	0.56	1725	56C	VSWDM3542 ▮	1.1	8.50	2.3	77.9	79.9	80.0	55	71	81	6205	6203	E	11.07	CD0005
1	0.75	1725	56C	VSWDM3546 ▮	1.6	11.3	3.0	75.4	79.3	81.5	58	71	74	6205	6203	E	12.07	CD0005
1	0.75	1725	143TC	VSWDM3546T ▮	1.6	11.3	3.0	75.4	79.3	81.5	58	71	74	6205	6203	E	12.12	CD0005
1.5	1.1	1725	56C	VSWDM3554 ▮	2.1	18.3	4.5	78.0	81.7	82.5	65	72	82	6205	6203	E	12.95	CD0005
1.5	1.1	1725	145TC	VSWDM3554T ▮	2.1	18.3	4.5	78.0	81.7	82.5	65	72	82	6205	6203	E	13.00	CD0005
2	1.5	1725	145TC	VSWDM3558T ▲	3.1	22.0	6.0	82.2	83.7	82.5	59	72	77	6205	6203	E	13.31	CD0005

NOTE: Volt Code: E = 208-230/460V, 60Hz; E1 = 230/460V, 60Hz, usable at 208V; F = 230/460V, 60 Hz.
See page 38 for Connection Diagrams. Efficiencies shown are nominal.
Data subject to change without notice. Contact Baldor for certified data.

▮ = TENV Enclosure - See page 26 for dimensions.
▲ = TEFC Enclosure - See page 26 for dimensions.

BALDOR

DirtyWD®

For the most severe and corrosive applications, those which use intense high-pressure washdown and marine applications. Complies with USCG259 and IEEE45 for marine use below deck.

Performance Data: TEFC - Totally Enclosed Fan Cooled, TENV - Totally Enclosed Non-Ventilated, 230/460 Volts, Three Phase, 1 through 10 Hp

Hp	kW	RPM	Frame	Catalog No.	Amps		Full Load Torque Lb. Ft.	Efficiency%			Bearings		Volt Code	"C" Dim.	Conn. Diag. No.
					Full Load	Locked Rotor		1/2	3/4	Full Load	DE	ODE			
C-Face with Base															
0.5	0.37	1725	56C	CWAM3538 ▮	0.8	6.25	1.5	72.4	76.2	75.5	6205	6203	E1	11.05	CD0005
0.75	0.56	1725	56C	CWAM3542 ▮	1.1	8.5	2.3	77.9	79.9	80.0	6205	6203	E1	11.05	CD0005
1	0.75	3450	56C	CWAM3545 ▲	1.6	8.9	1.5	62.0	64.3	74.0	6205	6203	E	12.28	CD0005
1	0.75	1725	56C	CWAM3546 ▮	1.6	11.3	3.0	75.4	79.3	81.5	6205	6203	E	12.05	CD0005
1	0.75	1140	56C	CWAM3556 ▲	1.7	8.0	4.5	71.1	74.1	75.5	6205	6203	E	13.28	CD0005
1	0.75	1725	143TC	CWAM3546T ▮	1.6	11.3	3.0	75.4	79.3	81.5	6205	6203	E	12.12	CD0005
1.5	1.1	3450	56C	CWAM3550 ▲	2.3	16.0	2.3	66.7	72.7	75.5	6205	6203	E	12.28	CD0005
1.5	1.1	1725	145TC	CWAM3554T ▮	2.1	18.3	4.5	78.0	81.7	82.5	6205	6203	E	13.00	CD0005
1.5	1.1	1140	56C	CWAM3557 ▲	2.5	10.6	7.0	77.1	78.4	75.5	6205	6203	F	13.28	CD0005
2	1.5	3450	56C	CWAM3555 ▲	2.7	17.5	3.0	78.2	80.3	78.5	6205	6203	E	13.28	CD0005
2	1.5	1740	56C	CWAM3558 ▮	2.8	21.0	6.0	83.8	85.2	84.0	6205	6203	E	13.28	CD0005
2	1.5	1160	184TC	CWAM3614T ▲	3.5	18.6	9.0	84.3	86.6	86.5	6206	6205	E	16.60	CD0005
2	1.5	1740	145TC	CWAM3558T ▲	2.8	21.0	6.0	83.8	85.2	84.0	6205	6203	E	13.35	CD0005
3	2.2	3450	145TC	CWAM3559T ▲	3.7	37.5	4.5	82.8	85.1	85.5	6205	6203	E	14.23	CD0005
3	2.2	1750	182TC	CWAM3611T ▲	4.1	32.4	8.9	86.1	87.8	87.5	6206	6205	E	16.60	CD0005
3	2.2	1160	213TC	CWAM3704T ▲	5.1	29.7	13.5	85.5	87.3	87.5	6307	6206	E	18.63	CD0005
5	3.7	3450	184TC	CWAM3613T ▲	6.0	56.0	7.6	87.8	88.4	87.5	6206	6205	E	16.60	CD0005
5	3.7	1750	184TC	CWAM3615T ▲	7.1	53.6	14.9	87.0	88.3	87.5	6206	6205	E	16.60	CD0005
5	3.7	1160	215TC	CWAM3708T ▲	8.1	55.9	22.6	85.5	87.4	87.5	6307	6206	E	18.63	CD0005
7.5	5.6	3450	184TC	CWAM3616T ▲	8.7	98.8	11.5	88.4	89.3	88.5	6206	6205	E	18.10	CD0005
7.5	5.6	1760	213TC	CWAM3710T ▲	9.8	65.2	22.3	88.6	89.8	89.5	6207	6206	E	18.63	CD0005
7.5	5.6	1175	254TC	CWAM22976T ▲	11.2	68.1	33.5	88.4	89.8	89.5	6309	6208	E	23.57	CD0005
10	7.5	3500	215TC	CWAM3711T ▲	11.5	148	15.1	90.5	90.8	89.5	6307	6206	E	18.63	CD0005
10	7.5	1760	215TC	CWAM3614T ▲	13.0	91.2	29.8	89.2	90.2	89.5	6207	6206	E	19.76	CD0005
10	7.5	1175	256TC	CWAM23932T ▲	15.3	99.9	44.0	86.5	88.9	89.5	6309	6208	E	23.57	CD0005
C-Face less Base															
0.5	0.37	1725	56C	VWAM3538 ▮	0.8	6.25	1.5	72.4	76.2	75.5	6205	6203	E1	11.05	CD0005
0.75	0.56	1725	56C	VWAM3542 ▮	1.1	8.5	2.3	77.9	79.9	80.0	6205	6203	E1	11.05	CD0005
1	0.75	1725	56C	VWAM3546 ▮	1.6	11.3	3.0	75.4	79.3	81.5	6205	6203	E	12.05	CD0005
1	0.75	1725	143TC	VWAM3546T ▮	1.6	11.3	3.0	75.4	79.3	81.5	6205	6203	E	12.13	CD0005
1.5	1.1	1725	56C	VWAM3554 ▮	2.1	18.3	4.5	78.0	81.7	82.5	6205	6203	E	12.93	CD0005
1.5	1.1	1725	145TC	VWAM3554T ▮	2.1	18.3	4.5	78.0	81.7	82.5	6205	6203	E	13.00	CD0005
2	1.5	1740	56C	VWAM3558 ▲	2.8	21.0	6.0	83.8	85.2	84.0	6205	6203	E	13.28	CD0005
2	1.5	1740	145TC	VWAM3558T ▲	2.8	21.0	6.0	83.8	85.2	84.0	6205	6203	E	13.35	CD0005
3	2.2	1750	182TC	VWAM3611T ▲	4.1	32.4	8.9	86.1	87.8	87.5	6206	6205	E	16.60	CD0005
5	3.7	1750	184TC	VWAM3615T ▲	7.1	53.6	14.9	87.0	88.3	87.5	6206	6205	E	16.60	CD0005
7.5	5.6	1760	213TC	VWAM3710T ▲	9.8	65.2	22.3	88.6	89.8	89.5	6207	6206	E	18.63	CD0005
10	7.5	1760	215TC	VWAM3614T ▲	13.0	91.2	29.8	89.2	90.2	89.5	6207	6206	E	19.76	CD0005

NOTE: Volt Code: E = 208-230/460V, 60Hz; E1 = 230/460V, 60Hz, usable at 208V; F = 230/460V, 60 Hz.
See page 45 for Connection Diagrams. Efficiencies shown are nominal.
Data subject to change without notice. Contact Baldor for certified data.

▮ = TENV Enclosure - See page 26 for dimensions.
▲ = TEFC Enclosure - See page 26 for dimensions.

AC Washdown Motor Features

Electrical	Std Washdown	Paint-free	WD Dirty Duty	Stainless	SSE	Benefit
Hp Range	1/2 - 20	1/2 - 10	1/2 - 10	1/2 - 10	1/2 - 10	Widest range of Wasdown motors available
kW Range	0.37 - 15	0.37 - 7.5	0.37 - 7.5	0.37 - 7.5	0.37 - 7.5	
Custom motors available with choice of voltage, frequency and speed						Custom designs available to meet exact performance requirements
Single phase designs available	S	Custom	Custom	Custom		Allows use of washdown motors where three phase power is unavailable
Permanent magnet DC motors available	S	S				Allows use of washdown motors when adjustable speed DC is required
Baldor SmartMotor available	S					Simple integrated motor and drive configuration
Premium efficiency windings	S Super-E	S Super-E	Custom	Custom	S	Low cost of operation
Class F insulation with Class B rise	S	S	S	S	S	Longer insulation and bearing life
1:15 Service factor	S	S	S	S	S	Short-term overload capability
200°C Inverter Spike Resistant magnet wire	S	S	S	S	S	Provides thermal safety margin
Phase insulation	S	S	S	S	S	Prevents breakown between phases
Corona inception testing - meets NEMA Part 31.4.4.2	S Super-E	S			S	Allows operation from inverters
Varnish double dip & bake	S	S	S	S		Eliminates voids in insulation
E3 Effusion Epoxy Encapsulation					S	Additional moisure prevention
UL and CSA approvals, CE directives	S	S	S	S	S	Approved by UL E46145 and CSA LR2262 flies. Complies with CE, RoHS and WEEE directives

Mechanical	Std Washdown	Paint-free	WD Dirty Duty	Stainless	SSE	Benefit
NEMA frame sizes	56 - 256T	56 - 215T	56 - 215T	56 - 215T	56 - 215T	Allows east mounting to existing equipment
IEC frame size capability	71 - 132	80 - 132	80 - 132	80 - 90	80 - 90	Metric frames allow for world-wide use
Black autophoretic coated cast iron endplates, conduit box and fan cover			S			Provides corrosion protection from severly caustic chemicals without expense of stainless motor construction
Stainless steel endplates, conduit box and fan cover				S	S	Ultimate in corrosion protection, finish matches most stainless processing equipment
Conduit box welded to band					S	Provides a leak-proof seal between the conduit box and the frame and eliminates the need for a gasket
Threaded inlet hole in conduit box	S	S	S	S	S	Allows use of water tight conduit connectors
Neoprene conduit box lid gasket & lead separator gasket	S	S	S	S		Keeps any motor condensation from conduit box
Seal endplate to frame joints	S	S	S			Sealed joints keep out moisture during washdown
O-ring endplate to frame joints				S	S	
V-ring shaft seals - DE & ODE	S					Protect bearings from water and contamination
Non-contact shaft seal - DE		S				Rotating labyrinth seals expell water and contamination before reaching bearings
Non-contact shaft seals - DE & ODE			S	S		
Patent-ppending premium external and internal bearing protection with patent pending mechanical seals					S	Prevents any moisture from reaching the windings, whether origination from ingress of condensation. Permanently seals the lead entrance to the conduit box
Hardware - stainless steel	S	S		S	S	Corrosion resistant
Balance 1/2 of NEMA	S	S	S	S	S	Smooth operation and long life
Autophoretic primer on steel parts	S		S			Additional rust prevention, Improves paint adhesion
4 condensate drain holes in each endplate with easily removable plugs	S	S		S		Allows condensate to drain regardless of mounting position
Hydrophobic aspiration system					S	Eliminates the need for drains and breathers. No need to remove and replace drains when mounting the motor
Fan cover notched for drain plug clearance on TEFC designs	S	S	S	S		Allows easy removal of drain plugs
Non-metallic external cooling fan on TEFC	S	S	S	S	S	Corrosion resistant
Finish paint with 2-part enhanced white epoxy and autophoretic treatment to band and fan cover	S					New paint process provides improved adhesion under severe caustic high pressure washdown
ASTM B117-90 96 hour salt spray tests	S	S	S	S	S	White paint finish holds up better than others, Dirty Duty and Stainless impervious to salt spray
Embossed Stainless steel nameplate with NEMA data	S	S	S			East to read with complete date
Nameplate data laser etched to band				S	S	No contamination can collect behind a bolt-on nameplate
416 Stainless steel shaft	S	S	S	S	S	Rust free shaft

Baldor Washdown Duty Motors: Performance and reliability, inside and out

Maintenance-friendly drain design
Four condensate drain holes in each endplate allow thorough drainage, regardless of motor's mounting position. Distinctive blue color of drain plugs makes them easy to recognize; new shape makes them easy to remove. Notched fan cover allows easy access to condensate drain plugs without removing fan cover. Paint-free and all stainless motors use screw-in stainless plugs.

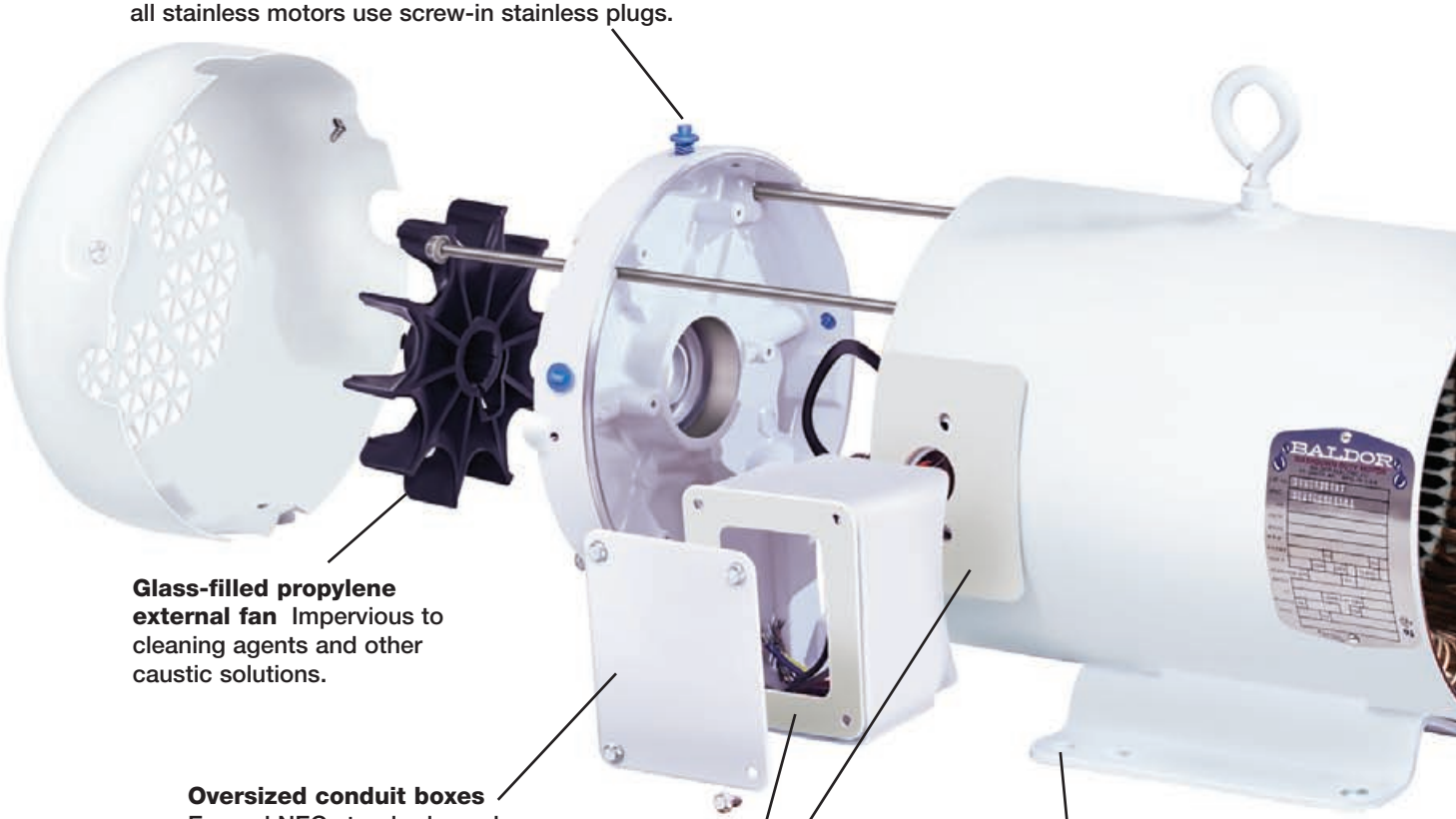

Glass-filled propylene external fan Impervious to cleaning agents and other caustic solutions.

Oversized conduit boxes
Exceed NEC standards; make connections easier.

Neoprene rubber gaskets on conduit box
Ensure a tight, waterproof seal.

Multiple foot mounting holes
Makes motor change-out easy.

(1): Labyrinth seal on shaft extensions Standard on All Stainless and Paint-Free motors. Non-contacting seal protects the motor bearings by rotating and expelling contaminants.Drive end only on Paint-Free motors; both ends on All Stainless motors.
(2): Currently available on all Paint-Free and All Stainless motors

Improved exterior paint – 5 times better!
Autophoretic® autodeposition surface preparation method makes finish coat five times more resistant to corrosion and chipping than previous methods. Withstands ASTM B117 salt spray test for over 500 hours. FDA approved epoxy powder coating electrostatically applied (inside and outside) on end-plate and conduit box for thorough corrosion prevention and long lasting finish.

Precision die cast aluminum rotor – Precision balanced and coated with an epoxy primer to resist corrosion.

Windings engineered for durability
Double dipped and baked varnish eliminates voids provides stronger bond and improves moisture resistance. Encapsulation (2) adds another level of internal contaminant and moisture protection.

Forsheda® slinger and contact lip seal on output shaft extension (1)
An extra measure of protection to keep contaminants out.

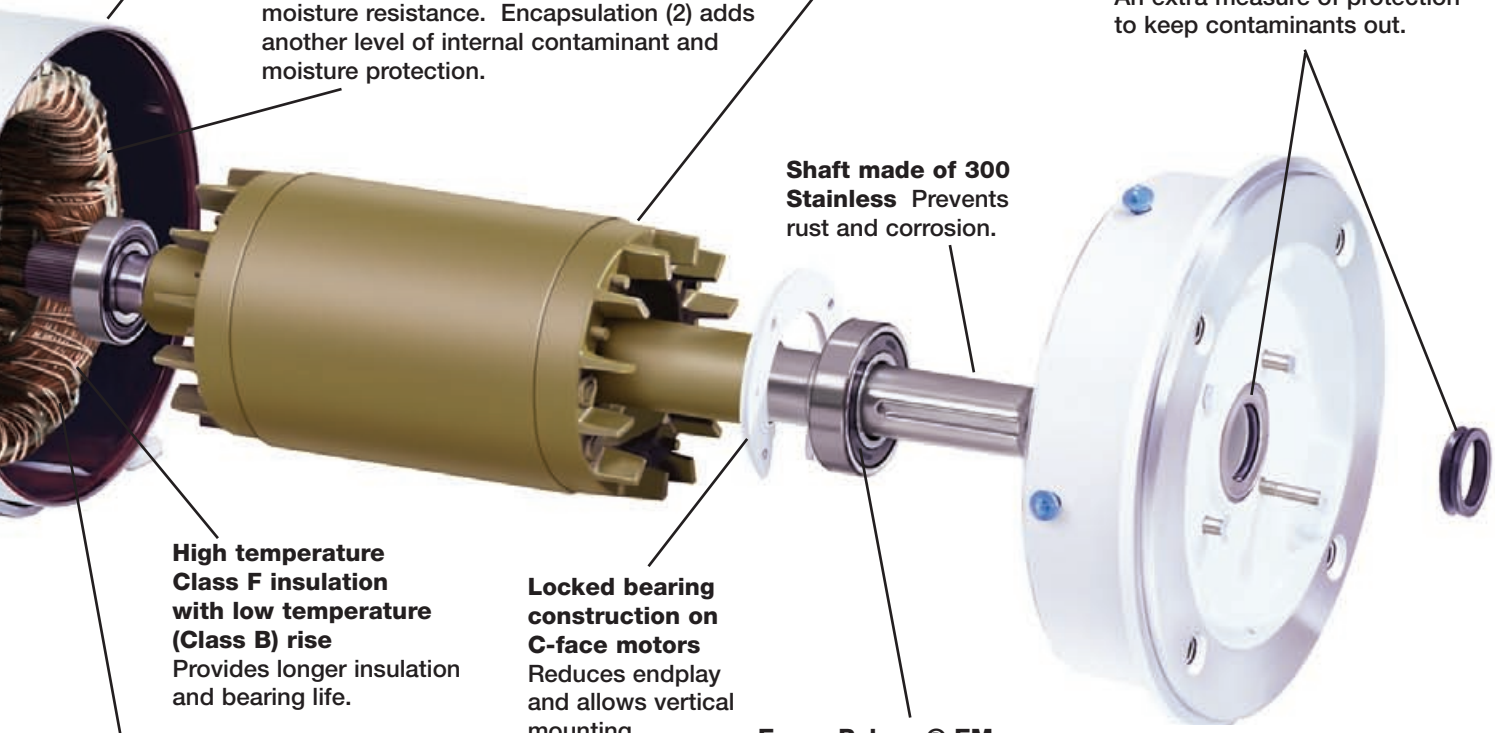

Shaft made of 300 Stainless Prevents rust and corrosion.

High temperature Class F insulation with low temperature (Class B) rise
Provides longer insulation and bearing life.

Locked bearing construction on C-face motors
Reduces endplay and allows vertical mounting.

Exxon Polyrex® EM grease
Standard double sealed motor bearings better for improved lubrication life. PolyrexEM has greater shear stability and superior resistance to washout, rust and corrosion.

Exclusive ISR® (Inverter Spike Resistant) magnet wire Up to 100 times more resistant to voltage spikes; provides an added thermal safety margin.

BALDOR

Premium Efficient Super-E® Washdown Motors

For multi-shift food and pharmaceutical processing applications, Baldor Super-E Washdown motors deliver both reliability and energy cost savings. These NEMA Premium® Inverter Ready motors share the rugged mechanical characteristics of Baldor's Standard Washdown Motors.

NEMA Premium®

Performance Data: TEFC - Totally Enclosed Fan Cooled, TENV - Totally Enclosed Non-Ventilated, 230/460 Volts, Three Phase, 1 through 20 Hp

Hp	kW	RPM	Frame	Catalog No.	Amps @ High V		Full Load Torque Lb. Ft.	Efficiency %			Power Factor %			Bearings		Volt Code	"C" Dim.	Conn. Diag. No.
					Full Load	Locked Rotor		1/2	3/4	Full Load	1/2	3/4	Full Load	DE	ODE			
Rigid base																		
1	0.75	1740	143T	EWDM3546T ▮	1.4	12.2	3.0	86.9	87.8	86.5	57	70	78	6205	6203	E	12.12	CD0005
1.5	1.1	1740	145T	EWDM3554T ▮	2.0	17.6	4.5	87.7	88.3	86.5	61	74	81	6205	6203	E1	13.00	CD0005
2	1.5	1725	145T	EWDM3558T ▲	2.7	19.6	6.0	87.9	88.3	86.5	64	76	82	6205	6203	E	14.18	CD0005
3	2.2	1760	182T	EWDM3611T ▲	4.1	32.0	9.0	89.1	90.0	89.5	58	71	77	6206	6205	E	16.54	CD0005
5	3.7	1750	184T	EWDM3615T ▲	6.5	53.7	15.0	89.7	90.7	90.2	62	74	80	6206	6205	E1	18.04	CD0005
7.5	5.6	1770	213T	EWDM3710T ▲	9.4	72.0	22.2	90.5	91.8	91.7	62	75	81	6307	6206	E1	19.04	CD0005
10	7.5	1760	215T	EWDM3714T ▲	12.5	93.8	30.0	92.6	93.0	92.4	67	77	82	6307	6206	F	20.54	CD0005
C-face with base																		
1	0.75	3450	56C	CEWDM3545 ▲	1.4	12.1	1.5	80.5	83.6	84.0	65	77	82	6205	6203	F	12.24	CD0005
1	0.75	1750	56C	CEWDM3546 ▮	1.4	14.1	3.0	87.1	88.4	87.5	60	73	80	6205	6203	F	12.94	CD0005
1	0.75	1740	143TC	CEWDM3546T ▮	1.4	12.2	3.0	86.9	87.8	86.5	57	70	78	6205	6203	E	12.13	CD0005
1	0.75	1150	56C	CEWDM3556 ▲	1.8	9.9	4.5	80.1	82.9	82.5	42	54	63	6205	6203	E	13.24	CD0005
1.5	1.1	3450	56C	CEWDM3550 ▲	2.0	20.1	2.3	81.3	84.3	85.5	68	78	83	6205	6203	E	13.24	CD0005
1.5	1.1	1740	145TC	CEWDM3554T ▮	2.0	17.6	4.5	87.7	88.3	86.5	61	74	81	6205	6203	E1	13.00	CD0005
2	1.5	3450	56HCY	CEWDM3555 ▲	2.5	30.0	3.0	83.8	86.2	86.5	70	80	85	6205	6203	E	14.12	CD0005
2	1.5	3450	145TC	CEWDM3555T ▲	2.5	30.0	3.0	83.8	86.2	86.5	70	80	85	6205	6203	E	14.17	CD0005
2	1.5	1725	145TC	CEWDM3558T ▲	2.7	19.6	6.0	87.9	88.3	86.5	64	76	82	6205	6203	E	14.17	CD0005
3	2.2	3475	145TC	CEWDM3559T ▲	3.6	37.9	4.5	85.6	86.8	86.5	80	88	91	6205	6203	F	15.55	CD0005
3	2.2	1760	182TC	CEWDM3611T ▲	4.1	32.0	9.0	89.1	90.0	89.5	58	71	77	6206	6205	E	16.54	CD0005
5	3.7	3500	184TC	CEWDM3613T ▲	5.6	55.0	7.5	90.5	90.8	89.5	83	90	93	6206	6205	E	16.54	CD0005
5	3.7	1750	184TC	CEWDM3615T ▲	6.5	53.7	15.0	89.7	90.7	90.2	62	74	80	6206	6205	E1	18.04	CD0005
7.5	5.6	3500	213TC	CEWDM3709T ▲	8.6	86.0	11.2	90.0	91.2	91	81	88	90	6307	6206	E	19.65	CD0005
7.5	5.6	1770	213TC	CEWDM3710T ▲	9.4	72.0	22.2	90.5	91.8	91.7	62	75	81	6307	6206	E1	19.78	CD0005
10	7.5	3500	215TC	CEWDM3711T ▲	11.2	120	15.0	92.7	92.9	91.7	82	89	92	6307	6206	E1	19.78	CD0005
10	7.5	1760	215TC	CEWDM3714T ▲	12.5	93.8	30.0	92.6	93.0	92.4	67	77	82	6307	6206	F	20.53	CD0005
15	11.1	3500	254TC	CEWDM23994T ▲	16.6	161	22.2	92.9	92.8	91.0	81	87	90	6309	6206	F	21.94	CD0005
15	11.1	3500	215TC	CEWDM3713T ▲	16.6	161	22.2	92.9	92.8	91.0	81	87	90	6307	6206	F	21.26	CD0005
15	11.1	1765	254TC	CEWDM23933T ▲	18.0	125	45.0	92.1	93.0	92.4	71	81	84	6309	6208	F	23.57	CD0005
20	15	3520	256TC	CEWDM41906T ▲	22.5	166	29.8	92.5	93.0	92.4	79	86	90	6309	6208	F	23.57	CD0005
C-face less base																		
1	0.75	1750	56C	VEWDM3546 ▮	1.4	14.1	3.0	87.1	88.4	87.5	60	73	80	6205	6203	F	12.94	CD0005
1	0.75	1750	143TC	VEWDM3546T ▮	1.4	14.1	3.0	87.1	88.4	87.5	60	73	80	6205	6203	F	13.00	CD0005
1.5	1.1	1740	56C	VEWDM3554 ▮	2.0	17.6	4.5	87.7	88.3	86.5	61	74	81	6205	6203	E1	12.94	CD0005
1.5	1.1	1740	145TC	VEWDM3554T ▮	2.0	17.6	4.5	87.7	88.3	86.5	61	74	81	6205	6203	E1	13.00	CD0005
2	1.5	1725	56C	VEWDM3558 ▲	2.7	19.6	6.0	87.9	88.3	86.5	64	76	82	6205	6203	E	14.18	CD0005
2	1.5	1725	145TC	VEWDM3558T ▲	2.7	19.6	6	87.9	88.3	86.5	64	76	82	6205	6203	E	14.18	CD0005
3	2.2	1760	182TC	VEWDM3611T ▲	4.1	32.0	9.0	89.1	90.0	89.5	58	71	77	6206	6205	E	16.54	CD0005
5	3.7	1750	184TC	VEWDM3615T ▲	6.5	53.7	15.0	89.7	90.7	90.2	62	74	80	6206	6205	E1	18.05	CD0005
7.5	5.6	1770	213TC	VEWDM3710T ▲	9.4	72.0	22.2	90.5	91.8	91.7	62	75	81	6307	6206	E1	19.78	CD0005
10	7.5	1760	215TC	VEWDM3714T ▲	12.5	93.8	30.0	92.6	93.0	92.4	67	77	82	6307	6206	E	21.27	CD0005

NOTE: Volt Code: E = 208-230/460V, 60Hz; E1 = 230/460V, 60Hz, usable at 208V; F = 230/460V, 60 Hz; H = 575V, 60Hz.
See page 38 for Connection Diagrams. Efficiencies shown are nominal.
Data subject to change without notice. Contact Baldor for certified data.

▮ = TENV Enclosure - See page 26 for dimensions.
▲ = TEFC Enclosure - See page 26 for dimensions.

Washdown Motors

The standard in the food and pharmaceutical processing industries for more than 15 years, the Baldor Washdown Duty motors recently raised the bar once again with more features to improve reliability. A new exterior paint process makes the finish coat five times more resistant to corrosion and chipping. Exxon Polyrex® EM grease provides improve lubrication life, provides greater shear stability and superior resistance to washout, rust and corrosion. Distinctive blue colored drain plugs make them easy to recognize; new shape makes themeasy to remove.

Performance Data: TEFC - Totally Enclosed Fan Cooled, TENV - Totally Enclosed Non-Ventilated, 230/460 Volts, Three Phase, 1/2 through 20 Hp

Hp	kW	RPM	Frame	Catalog No.	Amps @ High V		Full Load Torque Lb. Ft.	Efficiency %			Power Factor %			Bearings		Volt Code	"C" Dim.	Conn. Diag. No.
					Full Load	Locked Rotor		1/2	3/4	Full Load	1/2	3/4	Full Load	DE	ODE			
Rigid base																		
0.5	0.37	1725	56	WDM3538 ▮	0.8	6.25	1.5	72.4	76.2	75.5	64	76	83	6205	6203	E1	11.07	CD0005
0.75	0.56	1725	56	WDM3542 ▮	1.1	8.5	2.3	77.9	79.9	80.0	55	71	81	6205	6203	E1	11.07	CD0005
1	0.75	1725	143T	WDM3546T ▮	1.6	11.3	3.0	75.4	79.3	81.5	58	71	74	6205	6203	E	12.12	CD0005
1.5	1.1	1725	145T	WDM3554T ▮	2.1	18.3	4.5	78.0	81.7	82.5	65	72	82	6205	6203	E	13.00	CD0005
2	1.5	1740	145T	WDM3558T ▲	2.8	21.6	6.0	83.6	85.2	84.0	61	74	81	6205	6203	E	14.08	CD0005
3	2.2	1750	182T	WDM3611T ▲	4.1	32.4	8.9	86.1	85.1	87.5	59	71	78	6206	6205	E	16.54	CD0005
5	3.7	1750	184T	WDM3615T ▲	7.1	53.6	12.0	87.0	88.2	87.5	57	69	75	6206	6205	E	16.54	CD0005
7.5	5.6	1760	213T	WDM3710T ▲	9.8	65.2	22.3	88.6	89.8	89.5	63	74	80	6307	6206	E	17.89	CD0005
10	7.5	1760	215T	WDM3714T ▲	14.2	91.2	29.9	89.2	90.2	89.5	63	74	80	6307	6206	E	19.04	CD0005
C-face with base																		
0.5	0.37	3450	56C	CWDM3537 ▮	0.9	6.0	0.75	59.6	66.9	70.0	62	72	76	6205	6203	E	11.07	CD0005
0.5	0.37	1725	56C	CWDM3538 ▮	0.8	6.25	1.5	72.4	76.2	75.5	64	76	83	6205	6203	E1	11.07	CD0005
0.5	0.37	1140	56C	CWDM3539 ▮	1.0	5.6	2.3	71.5	76.4	77.0	44	57	66	6205	6203	E1	12.07	CD0005
0.75	0.56	3450	56C	CWDM3541 ▮	1.1	8.1	1.14	74.4	78.7	80.0	63	73	80	6205	6203	E1	11.07	CD0005
0.75	0.56	1725	56C	CWDM3542 ▮	1.1	8.50	2.3	77.9	79.9	80.0	55	71	81	6205	6203	E1	11.07	CD0005
0.75	0.56	1140	56C	CWDM3543 ▮	1.3	15.1	3.5	74.5	78.0	78.5	50	63	70	6205	6203	E	12.94	CD0005
1	0.75	3450	56C	CWDM3545 ▮	1.3	8.9	1.5	80.5	83.1	82.5	69	82	88	6205	6203	F	11.07	CD0005
1	0.75	1725	56C	CWDM3546 ▮	1.6	11.3	3.0	75.4	79.3	81.5	58	71	74	6205	6203	E	12.07	CD0005
1	0.75	1725	143TC	CWDM3546T ▮	1.6	11.3	3.0	75.4	79.3	81.5	58	71	74	6205	6203	E	12.13	CD0005
1	0.75	1140	56C	CWDM3556 ▲	1.7	8.0	4.5	71.1	74.1	75.5	47	58	69	6205	6203	E	13.24	CD0005
1.5	1.1	3450	56C	CWDM3550 ▲	2.3	16.0	2.3	66.7	72.7	75.5	59	71	76	6205	6203	F	12.24	CD0005
1.5	1.1	1725	145TC	CWDM3554T ▲	2.1	18.3	4.5	78.0	81.7	82.5	65	72	82	6205	6203	E	13.00	CD0005
1.5	1.1	1140	56C	CWDM3557 ▲	2.5	10.6	7.0	77.1	78.4	75.5	54	67	68	6205	6203	F	13.24	CD0005
2	1.5	3450	56HCY	CWDM3555 ▲	2.7	17.5	3.0	78.2	80.3	78.5	80	87	93	6205	6203	E	13.24	CD0005
2	1.5	3450	145TC	CWDM3555T ▲	2.6	24.3	3.0	81.2	83.8	84.0	73	80	88	6205	6203	E	13.30	CD0005
2	1.5	1740	145TC	CWDM3558T ▲	2.8	21.6	6.0	83.6	85.1	84.0	64	74	81	6205	6203	E	14.17	CD0005
3	2.2	3460	145TC	CWDM3559T ▲	3.7	37.5	4.5	82.8	85.1	85.5	78	86	89	6205	6203	E	14.17	CD0005
3	2.2	1750	182TC	CWDM3611T ▲	4.1	32.4	8.9	86.1	87.8	87.5	59	71	78	6206	6205	E	16.54	CD0005
5	3.7	3450	184TC	CWDM3613T ▲	6.0	56.0	7.6	87.8	88.4	87.5	83	89	92	6206	6205	E	16.54	CD0005
5	3.7	1750	184TC	CWDM3615T ▲	7.1	53.6	12.0	87.0	88.3	87.5	57	69	75	6206	6205	E	16.54	CD0005
7.5	5.6	3450	213TC	CWDM3709T ▲	8.7	94.0	11.3	88.4	89.3	88.5	84	91	93	6207	6205	E	18.54	CD0005
7.5	5.6	1760	213TC	CWDM3710T ▲	9.8	65.2	22.2	88.6	89.8	89.5	63	74	80	6307	6206	E	18.65	CD0005
10	7.4	3500	215TC	CWDM3711T ▲	11.5	84.0	15.0	90.6	90.8	89.5	83	88	91	6307	6206	E	18.65	CD0005
10	7.4	1760	215TC	CWDM3714T ▲	13.0	91.2	29.9	89.2	90.2	89.5	63	74	80	6307	6206	E	19.78	CD0005
15	11.1	3450	254TC	CWDM23994T ▲	17.0	152	22.6	91.6	91.9	90.2	85	90	91	6309	6206	E	21.94	CD0005
15	11.1	3450	215TC	CWDM3713T ▲	17.0	152	22.6	91.6	91.9	90.2	85	90	91	6307	6206	E	21.26	CD0005
15	11.1	1760	254TC	CWDM23933T ▲	17.3	115	42.6	90.3	91.5	91	71	81	89	6309	6208	E1	23.57	CD0005
20	15	3525	256TC	CWDM41906T ▲	22.7	188	30.0	89.7	91.1	91	81	88	90	6309	6208	E1	23.57	CD0180
20	15	1760	256TC	CWDM23934T ▲	23.0	164	60.0	91.0	91.9	91.7	85	84	89	6309	6208	E1	23.57	CD0005

NOTE: Volt Code: E = 208-230/460V, 60Hz; E1 = 230/460V, 60Hz, usable at 208V; F = 230/460V, 60 Hz; H = 575V, 60Hz.
See page 38 for Connection Diagrams. Efficiencies shown are nominal.
Data subject to change without notice. Contact Baldor for certified data.

▮ = TENV Enclosure - See page 26 for dimensions.
▲ = TEFC Enclosure - See page 26 for dimensions.

Washdown Motors continued…

Performance Data: TEFC - Totally Enclosed Fan Cooled, TENV - Totally Enclosed Non-Ventilated, 230/460 Volts, Three Phase, 1/2 through 20 Hp and 575 Volts, Three Phase, 1/2 through 5 Hp

Hp	kW	RPM	Frame	Catalog No.	Amps @ High V		Full Load Torque Lb. Ft.	Efficiency %			Power Factor %			Bearings		Volt Code	"C" Dim.	Conn. Diag. No.
					Full Load	Locked Rotor		1/2	3/4	Full Load	1/2	3/4	Full Load	DE	ODE			
C-face less base																		
0.5	0.37	1725	56C	VWDM3538 ▮	0.8	6.25	1.5	72.4	76.2	75.5	64	76	83	6205	6203	E1	11.06	CD0005
0.75	0.56	1725	56C	VWDM3542 ▮	1.1	8.5	2.3	77.9	79.9	80.0	55	71	81	6205	6203	E1	11.06	CD0005
1	0.75	1725	56C	VWDM3546 ▮	1.6	11.3	3.0	75.4	79.3	81.5	58	71	74	6205	6203	E	12.07	CD0005
1	0.75	1725	143TC	VWDM3546T ▮	1.6	11.3	3.0	75.4	79.3	81.5	58	71	74	6205	6203	E	12.13	CD0005
1.5	1.1	1725	56C	VWDM3554 ▮	2.1	18.3	4.5	78.0	81.7	82.5	65	72	82	6205	6203	E	12.94	CD0005
1.5	1.1	1725	145TC	VWDM3554T ▮	2.1	18.3	4.5	78.0	81.7	82.5	65	72	82	6205	6203	E	13.00	CD0005
2	1.5	1725	56C	VWDM3558 ▲	3.1	22.0	6.0	82.2	83.7	82.5	59	72	77	6205	6203	E	13.24	CD0005
2	1.5	1725	145TC	VWDM3558T ▲	3.1	22.0	6.0	82.2	83.7	82.5	59	72	77	6205	6203	E	13.30	CD0005
3	2.2	1725	182TC	VWDM3611T ▲	4.1	35.0	9.0	81.0	83.0	84.0	63	75	82	6206	6203	E	15.18	CD0005
5	3.7	1725	184TC	VWDM3615T ▲	6.6	55.0	15	85.9	86.1	85.5	69	80	80	6206	6205	E	16.54	CD0005
7.5	5.6	1760	213TC	VWDM3710T ▲	10.8	76.2	22.3	83.7	85.5	86.5	59	71	78	6307	6206	E	18.63	CD0005
10	7.5	1725	215TC	VWDM3714T▲	13.0	110	30.0	86.8	88.1	87.5	65	76	82	6307	6206	E	19.78	CD0005
575 Volt, C-face with base																		
0.5	0.37	1725	56C	CWDM3538-5 ▮	0.6	5.0	1.5	72.2	76.8	78.5	57	69	77	6205	6203	H	11.07	CD0006
0.75	0.56	1725	56C	CWDM3542-5 ▮	0.9	6.8	2.3	77.9	79.9	80.0	59	68	81	6205	6203	H	11.07	CD0006
1	0.75	1725	56C	CWDM3546-5 ▮	1.3	9.0	3.0	75.4	79.3	81.0	58	71	74	6205	6203	H	12.07	CD0006
1.5	1.1	1725	145TC	CWDM3554T-5 ▮	1.7	14.6	4.5	78.0	81.7	82.5	65	72	82	6205	6203	H	13.00	CD0006
2	1.5	1740	145TC	CWDM3558T-5 ▲	2.2	16.8	6.0	83.8	85.2	84.0	61	73	79	6205	6203	H	13.30	CD0006
3	2.2	1750	182TC	CWDM3611T-5 ▲	3.3	25.9	8.9	86.1	87.8	87.5	59	71	78	6206	6205	H	16.54	CD0006
5	3.7	1750	184TC	CWDM3615T-5 ▲	5.7	43.5	14.9	86.9	88.2	87.5	56	69	75	6206	6205	H	16.54	CD0006

NOTE: Volt Code: E = 208-230/460V, 60Hz; E1 = 230/460V, 60Hz, usable at 208V; F = 230/460V, 60 Hz; H = 575V, 60Hz.
See page 38 for Connection Diagrams. Efficiencies shown are nominal.
Data subject to change without notice. Contact Baldor for certified data.

▮ = TENV Enclosure - See page 26 for dimensions.
▲ = TEFC Enclosure - See page 26 for dimensions.

NEMA Premium®

Washdown Super-E® Brake Motors

Baldor Super-E brake motors meet or exceed NEMA Premium® efficiency and are built to the standards of Baldor's white washdown duty motors. These brake motors have their spring-set brakes mounted opposite the drive end, allowing a NEMA-standard BA dimension. Brake coils are connected inside the conduit box allowing easy access for separate connection when used with an adjustable speed drive. Inverter Spike Resistant magnet wire.

Performance Data: TENV & TEFC, Rigid Base, 230/460 volts, 1 through 10 HP

Hp	kW	RPM	Frame	Catalog No.	Amps @ 460V ①		Full Load Torque Lb. Ft.	Efficiency %			Power Factor %			Volt Code	"C" Dim.	Conn. Diag. No.	Brake Rating
					Full Load	Locked Rotor		1/2	3/4	Full Load	1/2	3/4	Full Load				
1/2	0.37	1750	56C	CEWDBM3538 ▮	0.8	6.3	1.5	76.6	80.8	82.5	54	67	72	F	15.31	CD0005	3
3/4	0.56	1740	56C	CEWDBM3542 ▮	1.1	17.3	2.3	80.5	83.4	82.5	55	67	75	F	15.31	CD0005	6
1	0.75	1740	56C	CEWDBM3546 ▮	1.4	12.2	3.0	86.9	87.8	86.5	57	70	78	E	16.31	CD0005	6
1	0.75	1740	143TC	CEWDBM3546T ▮	1.4	12.2	3.0	86.9	87.8	86.5	57	70	78	E	17.26	CD0005	10
1 1/2	1.1	1740	145TC	CEWDBM3554T ▮	2.0	17.6	4.5	87.7	88.3	86.5	61	74	81	E1	18.14	CD0005	10
2	1.5	1725	145TC	CEWDBM3558T ▲	2.7	19.6	6.0	87.9	88.3	86.5	64	76	82	E	19.44	CD0005	10
3	2.2	1760	182TC	CEWDBM3611T ▲	4.1	32.0	9.0	89.1	90.0	89.5	58	71	77	E	21.80	CD0005	15
5	3.7	1750	184TC	CEWDBM3615T ▲	6.5	53.7	15.0	89.7	90.7	90.2	62	74	80	E1	23.30	CD0005	25

NOTE: Volt Code: E = 208-230/460 volts, E1 = 230/460V, 60Hz, usable at 208V, F = 230/460 volts, 60 Hz.
① Amps at 460V - double for 230V. See page 52 for Connection Diagram.
Efficiencies shown are nominal. Data subject to change without notice.
Contact Baldor for certified data.

▮ = TENV Enclosure - See page 26 for dimensions.
▲ = TEFC Enclosure - See page 26 for dimensions.

Single Phase Washdown Motors

In food or pharmaceutical processing applications where limited voltage is available, or where there's an opportunity to operate additional equipment from the same line, Baldor offers Single Phase Washdown Motors. These motors have the same mechanical design characteristics as Baldor's three phase painted Washdown duty motors.

Performance Data: TEFC - Totally Enclosed Fan Cooled, 115/230 Volts, Single Phase, 1/2 through 1-1/2 Hp

Hp	kW	RPM	Frame	Catalog No.	Amps @ High V		Full Load Torque Lb. Ft.	Efficiency %			Power Factor %			Bearings		Volt Code	"C" Dim.	Conn. Diag. No.
					Full Load	Locked Rotor		1/2	3/4	Full Load	1/2	3/4	Full Load	DE	ODE			
C-face with base																		
0.5	0.37	1725	56C	CWDL3504	4.0	24.0	1.5	52.0	60.0	64.0	45	54	63	6205	6203	B	12.23	CD0001
0.75	0.56	1725	56C	CWDL3507	5.5	34.0	2.25	62.0	68.0	68.0	47	59	64	6205	6203	B	12.23	CD0001
1	0.75	3450	56C	CWDL3509	5.9	38.0	1.5	61.0	67.0	68.0	64	72	82	6205	6203	B	12.23	CD0001
1	0.75	1725	56C	CWDL3510	6.4	35.0	3.0	67.6	70.0	67.0	53	67	73	6205	6203	B	13.23	CD0001
1.5	1.1	3450	56C	CWDL3513	8.0	42.0	2.3	68.0	70.0	70.0	68	78	85	6205	6203	B	13.23	CD0001
1.5	1.1	1725	56C	CWDL3514	8.0	57.0	4.5	71.6	76.1	75.5	59	72	80	6205	6203	B	14.12	CD0016A01
C-face less base																		
0.5	0.37	1725	56C	VWDL3504	4.0	24.0	1.50	52.0	60.0	64.0	45	54	63	6205	6203	B	12.25	CD0001
0.75	0.56	1725	56C	VWDL3507	5.5	34.6	2.25	62.0	68.0	68.0	47	59	64	6205	6203	B	12.25	CD0001
1	0.75	1725	56C	VWDL3510	6.4	35.0	3.0	67.6	70.0	67.0	53	67	73	6205	6203	B	13.25	CD0001
1.5	1.1	1725	56C	VWDL3514	8.0	57.0	4.5	71.6	76.1	75.5	59	72	80	6205	6203	B	14.10	CD0016A01

NOTE: Volt Code: B = 115/230 volts, usable at 208 volts, 60 Hz.
See page 29 for dimension drawing. See page 38 for Connection Diagrams.

Close-Coupled Pump Washdown Motors

Baldor close-coupled pump washdown motors are for commercial and industrial water pump applications, or food processing applications that are exposed to high-pressure washdowns. Features over-sized ball bearings with locked drive end construction to minimize shaft movement. Contaminant and moisture-prevention features include a moisture sealant on the bolt heads between the frame and endplates, neoprene gaskets, and a Forsheda® running contact V-ring.

Performance Data: TEFC - Totally Enclosed Fan Cooled, TENV - Totally Enclosed Non-Ventilated, 230/460 Volts usable at 208 Volts, Three Phase, 1 through 15 Hp

Hp	kW	RPM	Frame	Catalog No.	Amps @ High V		Full Load Torque Lb. Ft.	Efficiency %			Power Factor %			Bearings		Volt Code	"C" Dim.	Conn. Diag. No.
					Full Load	Locked Rotor		1/2	3/4	Full Load	1/2	3/4	Full Load	DE	ODE			
1	0.75	1725	143JM	JMWDM3546T ▮	1.6	11.3	3.0	75.4	79.3	81.5	58	71	74	6206	6203	E	14.25	CD0005
1.5	1.1	3450	143JM	JMWDM3550T ▲	2.3	16.0	2.3	66.7	72.7	75.5	59	71	76	6206	6203	F	13.68	CD0005
1.5	1.1	1725	145JM	JMWDM3554T ▲	2.1	18.3	4.5	78.0	81.7	82.5	65	72	82	6206	6203	E	13.38	CD0005
2	1.5	3450	145JM	JMWDM3555T ▲	2.7	17.5	3	78.2	80.3	78.5	80	87	93	6206	6203	E	13.68	CD0005
2	1.5	1725	145JM	JMWDM3558T ▲	3.1	22.0	6.0	82.2	83.7	82.5	59	72	77	6206	6203	E	13.68	CD0005
3	2.2	3450	145JM	JMWDM3559T ▲	3.8	32.9	4.6	83.0	84.3	82.5	74	83	89	6206	6203	E	13.68	CD0005
3	2.2	1725	182JM	JMWDM3611T ▲	4.1	35.0	9.0	81.0	83.0	84	63	75	82	6207	6203	E	15.02	CD0005
5	3.7	3450	184JM	JMWDM3613T ▲	6.0	47.0	7.5	85.8	86.5	85.5	88	93	93	6207	6205	E	18.05	CD0005
5	3.7	1725	184JM	JMWDM3615T ▲	6.6	55.0	15.0	85.9	86.1	85.5	69	80	80	6207	6205	E	18.05	CD0005
7.5	5.6	3450	184JM	JMWDM3616T ▲	8.6	76.0	11.3	87.8	88.1	87.5	84	90	94	6207	6205	E	19.55	CD0005
7.5	5.6	1760	213JM	JMWDM3710T ▲	10.8	76.2	22.3	83.7	86.5	86.5	59	71	78	6309	6206	E	19.78	CD0005
10	7.5	3450	215JM	JMWDM3711T ▲	12.0	105.	15.0	85.0	86.0	85.5	88	90	91	6309	6206	E	19.78	CD0005
10	7.5	1725	215JM	JMWDM3714T ▲	13.0	110	30.0	86.8	88.1	87.5	65	76	82	6309	6206	E	20.91	CD0005
15	11.1	3450	215JM	JMWDM3713T ▲	17.0	175	22.8	85.2	86.9	86.5	84	91	95	6309	6206	F	20.91	CD0005

NOTE: Volt Code: E = 208-230/460V, 60Hz; E1 = 230/460V, 60Hz, usable at 208V; F = 230/460V, 60 Hz; H = 575V, 60Hz.
See page 38 for Connection Diagrams. Efficiencies shown are nominal.
Data subject to change without notice. Contact Baldor for certified data.

▮ = TENV Enclosure - See page 27 for dimensions.
▲ = TEFC Enclosure - See page 27 for dimensions.

Feather Picker Washdown Motors

Baldor Feather Picker motors are designed to withstand punishing, high-pressure, wet environments common in poultry processing plants. Dimensions, shaft and top-mounted conduit box configurations make these motors interchangeable with most OEM poultry processing equipment. These motors have the same mechanical design characteristics as Baldor's three phase painted Washdown duty motors.

Performance Data: TEFC - Totally Enclosed Fan Cooled, 230/460 Volts, usable at 208 Volts, Three Phase, 2 and 3 Hp

Hp	kW	RPM	Frame	Catalog No.	Amps @ High V		Full Load Torque Lb. Ft.	Efficiency %			Power Factor %			Bearings		Volt Code	"C" Dim.	Conn. Diag. No.
					Full Load	Locked Rotor		1/2	3/4	Full Load	1/2	3/4	Full Load	DE	ODE			
2	1.5	1740	145T	WDM3558TP	2.8	21.0	6.0	83.8	85.2	84.0	61	73	79	6205	6203	E	12.79	CD0005
3	2.2	1750	145T	WDM3561TP	4.1	38.6	9.0	86.8	88.1	87.5	56	71	78	6205	6203	E	15.04	CD0005

NOTE: Volt Code: E = 230/460 volts, 60 Hz.
See page 29 for dimension drawing. See page 38 for Connection Diagrams.
Efficiencies shown are nominal.
Data subject to change without notice. Contact Baldor for certified data.

Washdown and Paint-Free Inverter Drive® and Vector Drive® Motors

Washdown and Paint-Free versions of Baldor AC Inverter Drive and Vector Drive motors are designed for adjustable speed, full torque and precise positioning applications in a washdown environment. Typical applications include conveyors, pumps and batch mixing/ blending. Recommended for use with Baldor Inverter and Vector controls, although these motors will work with existing OEMcontrols.

Performance Data: TEFC - Totally Enclosed Fan Cooled, TENV - Totally Enclosed Non-Ventilated, 230/460 Volts, Three Phase, 1/2 through 10 Hp

Hp	kW	RPM	Frame	Catalog No.	Amps @ High V		Full Load Torque Lb. Ft.	Efficiency %			Power Factor %			Bearings		Volt Code	"C" Dim.	Conn Diag. No.
					Full Load	Locked Rotor		1/2	3/4	Full Load	1/2	3/4	Full Load	DE	ODE			
TENV White - Inverter Motors - C-face with base																		
1	0.75	1750	143TC	IDWNM3546T ▮	1.4	14.0	3.0	83.8	86.2	86.5	58	72	78	6205	6203	F	14.90	CD0005
1.5	1.1	1750	145TC	IDWNM3554T ▮	2.1	22.3	4.5	84.8	86.8	87.5	56	70	78	6205	6203	F	15.78	CD0005
2	1.5	1725	182TC	IDWNM3609T ▮	2.9	26.0	6.0	80.8	83.7	84.0	57	69	76	6206	6205	F	17.77	CD0005
3	2.2	1750	184TC	IDWNM3611T ▮	4.0	30.0	9.0	88.8	89.6	88.5	64	75	80	6206	6205	F	17.77	CD0005
5	3.7	1760	213TC	IDWNM3707T ▮	6.7	48.0	14.9	88.5	90.1	89.5	60	73	78	6307	6206	F	19.84	CD0005
7.5	5.6	1765	254TC	IDWNM22937T ▮	9.1	71.7	22.5	89.7	91.1	91.0	69	80	85	6309	6208	F	23.92	CD0005
10	7.5	1765	254TC	IDWNM22938T ▮	12.0	87.0	30.0	91.7	92.4	91.7	72	81	85	6309	6208	F	23.92	CD0005
Paint-free Inverter – C-face with base*																		
0.5	0.37	1750	56C	IDCSWDM3538 ▮	0.8	6.5	1.5	80.0	83.0	82.5	52	65	72	6205	6203	F	11.07	CD0005
0.75	0.56	1750	56C	IDCSWDM3542 ▮	1.0	9.6	2.3	74.1	78.2	78.5	57	70	80	6205	6203	F	12.07	CD0005
1	0.75	1740	56C	IDCSWDM3546 ▮	1.4	10.7	3.0	86.3	87.0	85.5	62	74	81	6205	6203	E	12.07	CD0005
1	0.75	1740	143TC	IDCSWDM3546T ▮	1.4	10.7	3.0	86.3	87.0	85.5	62	74	81	6205	6203	E	12.12	CD0005
1.5	1.1	1750	56C	IDCSWDM3554▲	2.1	20.0	4.5	86.4	87.7	87.5	57	71	78	6205	6203	F	13.24	CD0005
1.5	1.1	1750	145TC	IDCSWDM3554T▲	2.1	20.0	4.5	86.4	87.7	87.5	57	71	78	6205	6203	F	13.30	CD0005
2	1.5	1750	56C	IDCSWDM3558▲	2.5	22.0	6.0	87.6	88.0	86.5	64	77	83	6205	6203	F	14.12	CD0005
2	1.5	1750	145TC	IDCSWDM3558T▲	2.5	22.0	6.0	87.6	88.0	86.5	64	77	83	6205	6203	F	14.18	CD0005
3	2.2	1760	182TC	IDCSWDM3611T▲	4.1	32.0	9.0	89.1	90.0	89.5	58	71	80	6206	6205	F	16.56	CD0005
5	3.7	1750	184TC	IDCSWDM3615T▲	6.5	48.0	15.0	88.3	88.4	87.5	61	73	80	6206	6205	F	18.06	CD0005
7.5	5.6	1760	213TC	IDCSWDM3710T▲	10.0	82.0	22.0	82.1	84.7	89.5	61	73	80	6307	6206	F	19.81	CD0005
10	7.5	1760	215TC	IDCSWDM3714T▲	13.0	119	29.9	86.4	88.8	89.5	61	73	76	6307	6206	F	20.56	CD0005
Paint-free Inverter – C-face less base*																		
0.5	0.37	1750	56C	IDVSWDM3538 ▮	0.8	6.5	1.5	80.0	83.0	82.5	52	65	72	6205	6203	F	11.07	CD0005
0.75	0.56	1750	56C	IDVSWDM3542 ▮	1.0	9.6	2.3	77.1	78.2	78.5	57	70	80	6205	6203	F	12.07	CD0005
1	0.75	1740	56C	IDVSWDM3546 ▮	1.4	10.7	3.0	86.3	87.0	85.5	62	74	81	6205	6203	E	12.07	CD0005
1	0.75	1725	143TC	IDVSWDM3546T ▮	1.4	10.7	3.0	86.3	87.0	85.5	62	74	81	6205	6203	E	12.12	CD0005
1.5	1.1	1750	56C	IDVSWDM3554▲	2.1	20.0	4.5	86.4	87.7	87.5	57	71	78	6205	6203	F	13.24	CD0005
1.5	1.1	1750	145TC	IDVSWDM3554T▲	2.1	20.0	4.5	86.4	87.7	87.5	57	71	78	6205	6203	F	13.30	CD0005
2	1.5	1750	56C	IDVSWDM3558▲	2.5	22.0	6.0	87.6	88.0	86.5	64	77	83	6205	6203	F	14.12	CD0005
2	1.5	1750	145TC	IDVSWDM3558T▲	2.5	22.0	6.0	87.6	88.0	86.5	64	77	83	6205	6203	F	14.18	CD0005
3	2.2	1760	182TC	IDVSWDM3611T▲	4.0	32.0	9.0	89.1	90.0	89.5	58	71	80	6206	6205	F	16.56	CD0005
5	3.7	1750	184TC	IDVSWDM3615T▲	6.5	48.0	15.0	88.3	88.4	87.5	61	73	80	6206	6205	F	18.06	CD0005
TENV White - Vector Motors - C-face with base																		
1	0.75	1750	143TC	ZDWNM3546T ▮	1.4	14.0	3.0	83.8	86.2	86.5	58	72	78.0	6205	6203	F	14.90	CD0005
1.5	1.1	1750	145TC	ZDWNM3554T ▮	2.1	22.3	4.5	84.8	86.8	87.5	56	70	78.0	6205	6203	F	15.78	CD0005
2	1.5	1725	182TC	ZDWNM3609T ▮	2.9	26.0	6.0	80.8	83.7	84.0	57	69	76.0	6206	6205	F	17.77	CD0005
3	2.2	1750	184TC	ZDWNM3611T ▮	4.0	30.0	9.0	88.8	89.6	88.5	64	75	80.0	6206	6205	F	17.77	CD0005
5	3.7	1760	213TC	ZDWNM3707T ▮	6.7	48.0	14.9	88.5	90.1	89.5	60	73	78.0	6307	6206	F	19.84	CD0005
7.5	5.6	1765	254TC	ZDWNM22937T ▮	9.1	71.7	22.5	89.7	91	91.0	69	80	85.0	6309	6208	F	23.92	CD0005
10	7.5	1765	254TC	ZDWNM22938T ▮	12.0	87.0	30.0	91.7	92.4	91.7	72	81	85.0	6309	6208	F	23.92	CD0005

Vector Drive motors include 1024PPR industrial duty encoder.
NOTE: Volt Code: E = 208-230/460V, 60Hz; E1 = 230/460V, 60Hz, usable at 208V; F = 230/460V, 60 Hz; H = 575V, 60Hz.
See page 38 for Connection Diagrams. Efficiencies shown are nominal.
Data subject to change without notice. Contact Baldor for certified data.

▮ = TENV Enclosure - See page 28 for dimensions.
▲ = TEFC Enclosure - See page 28 for dimensions.
* Paint-Free Inverter Motors are not encoder adaptable.

Paint-Free IEC Metric Washdown Duty AC Motors

All exterior motor surfaces are totally paint-free, USDA approved. Designed for food processing and applications where the motor is constantly exposed to an environment requiring high pressure wash down to maintain cleanliness. Stainless steel motor frame, base, shaft and hardware. Specially processed cast iron flange / endplate on drive end. 200° Magnet Wire with Moisture Resistant insulation.

Performance Data: 415 Volts, Three Phase, 50Hz

kW	Hp	RPM	Frame	Catalog No.	Amps @ High V		Full Load Torque Lb. Ft.	Efficiency %			Power Factor %			Bearings		"C" Dimension		Conn Diag. No.
					Full Load	Locked Rotor		1/2	3/4	Full Load	1/2	3/4	Full Load	DE	ODE	mm	(Inch)	
0.75	1	1440	D90S	MSWDM3546-57 ▮	1.6	15.2	3.7	84.4	85.4	84.0	57	68	80	6205	6203	300	11.82	CD0022
0.75	1	1440	D80D	VSWDM3546D-57 ▮	1.6	15.2	3.7	84.4	85.4	84.0	57	68	80	6205	6203		11.43	CD0022
1.5	2	1440	D90L	MSWDM3558-57	3.2	26.6	7.3	86.9	87.7	86.5	55	68	75	6205	6203	388	15.26	CD0022
1.5	2	1440	D90L	VSWDM3558D-57	3.2	26.6	7.3	86.9	87.7	86.5	55	68	75	6206	6203	439	17.27	CD0022

NOTE: Voltage: -57 = 240/425 Volt - 50 Hz
▮ = TENV, others TEFC

IEC Metric Washdown Duty AC Motors

Designed for food processing and other applications where the motor is constantly exposed to an environment requiring high pressure wash down to maintain cleanliness. USDA approved Epoxy Finish. 200° Magnet Wire with Moisture Resistant insulation.

Performance Data: 415 Volts, Three Phase, 50Hz

kW	Hp	RPM	Frame	Catalog No.	Amps @ High V		Full Load Torque Lb. Ft.	Efficiency %			Power Factor %			Bearings		"C" Dimension		Conn Diag. No.
					Full Load	Locked Rotor		1/2	3/4	Full Load	1/2	3/4	Full Load	DE	ODE	mm	(Inch)	
0.56	.075	1425	56C	CWDM3542-57 ▮	1.2	9.09	2.76	78.0	80.0	77.0	54	71	80	6205	6203	281	11.07	CD0022
0.56	0.75	1425	D80D	VWDM3542D-57 ▮	1.2	9.09	2.76	78.0	80.0	77.0	54	71	80	6206	6203	265	10.43	CD0022
0.75	1	1425	D90S	MWDM3546-57 ▮	1.7	13.2	3.6	75.3	79.0	80.0	52	66	81	6205	6203	300	11.82	CD0022
0.75	1	1425	D80D	VWDM3546D-57 ▮	1.7	13.2	3.6	75.3	79.0	80.0	52	66	81	6206	6203	290	11.43	CD0022
1.1	1.5	1425	D90S	MWDM3554-57 ▮	2.3	18.4	5.44	78.0	81.8	80.0	66	72	82	6205	6203	323	12.70	CD0022
1.1	1.5	1425	D90D	VWDM3554D-57 ▮	2.3	18.4	5.44	78.0	81.8	80.0	66	72	82	6206	6203	323	12.70	CD0022
0.37	0.5	1425	D71-D-B35	CWMM3461-57	1.2	6.47	1.82	66.3	72.5	74.0	40	50	63	6203	6203	290	11.41	CD0022
1.5	2	1425	D90L	MWDM3558-57	2.3	21.4	7.35	78.0	81.1	81.0	55	69	78	6205	6203	330	12.98	CD0022
1.5	2	1425	D90D	VWDM3558D-57	2.3	21.4	7.35	78.0	81.1	81.0	55	69	78	6206	6203	330	13.00	CD0022
2.2	3	1425	D112M	MWDM3611-56	4.5	28.0	11.0	83.2	84.4	84.0	68	82	81	6206	6205	410	16.16	CD0006
2.2	3	1425	D100D	VWDM3611D-57	4.0					84.0			81	6206	6205	395	15.55	CD0022
4	5	1425	D112M	MWDM3615-56	7.4	57.0	18.0	84.0	85.6	84.0	69	80	80	6206	6205	449	17.67	CD0006
4	5	1425	D112D	VWDM3615D-56	7.4	57.0	18.0	84.0	85.6	84.0	69	80	80	6206	6205	433	17.05	CD0006
5.5	7.5	1425	D132S	MWDM3710-56	11.6	87.0	27.5	84.0	85.0	84.0	58	72	81			449	17.66	CD0006
5.5	7.5	1425	D132D	VWDM3710D-56	11.6	87.0	27.5	84.0	85.0	84.0	58	72	81	6209	6206	411	16.21	CD0006
7.5	10	1425	D132M	MWDM3714-56	16.0					85.5			76			477	18.78	CD0006
7.5	10	1425	D132D	VWDM3714D-56	16.0					85.5			76			440	17.34	CD0006

NOTE: Voltage: -56 = 415 Volt - 50 Hz - Wye/Delta
-57 = 240/415 Volt - 50 Hz
▮ = TENV, others TEFC

Baldor SmartMotor®

Baldor's breakthrough technology SmartMotor is available from stock in a Washdown Duty version. Designed for variable torque, constant torque or constant horsepower washdown applications, the SmartMotor combines adjustable speed control electronics with an industrial Washdown motor in one easy to install, easy to use package. An available 32-character keypad provides a wide range of parameter adjustments. The reduced distance between motor and control – mere inches, instead of feet – reduces reflective wave voltage, or "ring-up." Can be used for new installations, replacements or OEM. Uses a NEMA Type 4 enclosure with threaded conduit holes for connection to line power.

Performance Data: TEFC - Totally Enclosed Fan Cooled, 230 and 460 Volts, Three Phase, 1 through 10 Hp

Hp @ Base Speed	kW @ Base Speed	Base Speed @ 60 Hz	Full Load AMPS	NEMA Frame	Catalog No.	Constant Torque Speed Range		"C" Dimension
						Min. RPM	Max. RPM	
230 VOLTS								
1	0.75	1750	2.8	56C	CWDSM3546-2	180	1800	13.40
1	0.75	1750	2.8	143TC	CWDSM3546T-2	180	1800	13.46
2	1.5	1750	5.1	145TC	CWDSM3558T-2	180	1800	15.71
3	2.2	1760	9.4	182TC	CWDSM3611T-2	300	1800	16.55
5	3.7	1750	14.2	184TC	CWDSM3615T-2	300	1800	18.05
7.5	5.6	1760	20.4	213TC	CWDSM3710T-2	400	1800	18.69
10	7.5	1760	26.2	215TC	CWDSM3714T-2	400	1800	20.52
460 VOLTS								
1	0.75	1750	1.4	56C	CWDSM3546-4	180	1800	13.40
1	0.75	1750	1.4	143TC	CWDSM3546T-4	180	1800	13.46
2	1.5	1750	2.6	145TC	CWDSM3558T-4	180	1800	15.71
3	2.2	1760	4.8	182TC	CWDSM3611T-4	300	1800	16.55
5	3.7	1750	7.0	184TC	CWDSM3615T-4	300	1800	18.05
7.5	5.6	1760	10.2	213TC	CWDSM3710T-4	400	1800	18.69
10	7.5	1760	13.1	215TC	CWDSM3714T-4	400	1800	20.52

NOTE: See page 37 for dimension drawing.
Data subject to change without notice. Contact Baldor for certified data.

Series 5 Washdown Micro Inverters

When space is at a premium in a washdown application, Baldor Series 5 Micro Inverters provide variable torque, constant torque and constant horsepower control in a small package. These controls may be used in new installations, replacements or original equipment. The NEMA 4X enclosure is suitable for frequent washdowns. They have an output frequency of 0.25 to 120 Hz, with a peak overload capacity of 150%. Control features include separate accel/decel rates and controlled reversing. Standard operator control includes rotary speed settings, start/stop command and power on/off.

Hp/kW	Input Volt	Output Current		Catalog Number	Dimensions in/(mm)				
					Outside			Mounting	
		Cont.	120 Sec.		H	W	D	H	W
Single Phase Input									
1/0.75	115/230	3.6	5.4	ID5601-WO	9.53	5.51	5.86	8.85	–
1/0.75	115/230	3.6	5.4	ID5601-BO	9.53	5.51	5.86	8.85	–
2/1.5	115/230	5.5/6.7	8.3/10.0	ID5602-WO	9.8	7.55	7.25	9.25	1
2/1.5	115/230	5.5/6.7	8.3/10.0	ID5602-BO	9.8	7.55	7.25	9.25	1
Three Phase Input									
3/2.25	230	9	13.5	ID5203-WO	9.8	7.55	7.25	9.25	1
3/2.25	230	9	13.5	ID5203-BO	9.8	7.55	7.25	9.25	1
3/2.25 ①	460	4.6	6.9	ID5403-WO	9.8	7.55	7.25	9.25	1
3/2.25 ①	460	4.6	6.9	ID5403-BO	9.8	7.55	7.25	9.25	1
5/3.7	460	8.3	12.45	ID5405-WO	9.8	7.55	7.25	9.25	1
5/3.7	460	8.3	12.45	ID5405-BO	9.8	7.55	7.25	9.25	1

NOTE: -WO is white in color -BO is black in color
① Jumper configurable for 1 HP and 2 HP

Output Ratings	Overload Capacity	150% for 120 seconds
	Voltage - 3 Phase	0-230 VAC (RMS), 0-460 VAC (RMS)
Control Spec	Control Method	Sinewave carrier input, PWM output
	PWM Frequency	Rated 8.0 kHz
	V/Hz Ratio	Factory set for optimum output
	Torque Boost	Adjustable 0-30% max
	Current Limit	Adjustable of rated output
	Frequency Setting	0-5 VDC, 0-10 VDC with external resistor network, non-isolated input
	Accel/Decel	Separate accel/decel rates, 0.3-20 sec
Protective Functions	Inverter Trip	Over voltage, over current, under voltage, motor overload, output short circuit
	Status Indicators	Tricolor LED indicator for status and green LED indicator for power on short circuit output phase to phase
Ambient Conditions	Temperature	0-50°C
	Cooling	Convection; 3300 feet max without derate
	Enclosure	NEMA 4X (IP65)

Catalog No.	Accessories for Series 5 Inverters	Ap'x. Shpg. Wgt.
ID5SI-2	Signal isolator for NEMA 4X enclosed units Provides isolation for up to 24 VDC and 4-20mA command signals	0.5
ID5AMS-1	Auto/manual selection switch for NEMA 4X enclosed units Allows selection of remote or on-board speed commands	0.3
ID5FRS-1	Forward/stop/reverse selection switch for NEMA 4X enclosed units Allows selection of forward or reverse motor direction command	0.4

NOTE: See page 32 for dimension drawing. Data subject to change without notice. Contact Baldor for certified data.

Series 15H Washdown Inverters

Baldor 15H Washdown Inverter controls provide variable torque, constant torque and constant horsepower control in a NEMA 4X enclosure that can stand up to frequent washdowns. These controls may be used in new installations, replacements or original equipment. They have an output frequency of 0.25 to 120 Hz, with an option up to 400 Hz. Peak overload capacity is 150% for sixty seconds. Features include a 32-character alphanumeric keypad for easy set-up and adjustment. Recommended for use with Baldor Washdown Inverter Drive® motors.

230 and 460 Volt

			Constant Torque Output Ratings with 2.5 KHz PWM Frequency			Quiet Drive Output Ratings with 8.0 KHz PWM Frequency		
				Output Current			Output Current	
Catalog No.	**Size**	**Volt**	**Hp**	**Cont.**	**Peak**	**Hp**	**Cont.**	**Peak**
				230 Volt				
ID15H201-W	A	230	1	4.2	8.4	0.75	3.2	6.4
ID15H202-W	A	230	2	7	14	1	4.2	8
ID15H203-W	A	230	3	10	20	2	7	14
ID15H205-W	A	230	5	16	32	3	10	20
ID15H207-W	B	230	7.5	22	38	5	16	32
ID15H210-W	B	230	10	28	56	7.5	22	44
ID15H215-W	B	230	15	42	71	10	28	56
				460 Volt				
ID15H401-W	A	460	1	2.1	4.2	0.75	1.6	3.2
ID15H402-W	A	460	2	4	8	1	2.1	4.2
ID15H403-W	A	460	3	5	10	2	4	8
ID15H405-W	A	460	5	8	16	3	5	10
ID15H407-W	B	460	7.5	11	22	5	8	16
ID15H410-W	B	460	10	14	28	7.5	11	22
ID15H415-W	B	460	15	21	36	10	15	30

Output Ratings	Overload Capacity	150% for 60 seconds; 170-200% for 3 seconds for constant torque
		115% for 60 seconds for variable torque
	Frequency	0.25-400 Hz
	Voltage	0-Maximum input voltage (RMS)
Input Ratings	Frequency	50 or 60 Hz ± 5%
	Voltage	200-240 VAC ±10%; 380-480 VAC ± 10%; 550-600 ± 10%
	Phase	Three phase (or single phase with derate)
	Impedance	3% minimum required for size A and B
Control Spec	Control Method	Sinewave carrier input, PWM output
	PWM Frequency	Adjustable 1-5 kHz standard, 1-15 kHz quiet
	V/Hz Ratio	Linear to squared reduced, base frequency, output voltage, minimum frequency limit, maximum frequency limit
	Torque Boost	0-15% of input voltage; automatic with manual override
	Brake Torque	20% standard
	Skip Frequency	Three zones 0-Max frequency
	Frequency Setting	0-5 VDC, 0-10 VDC, 4-20mA, digital via optional RS232/485, PID process control loop
	Accel/Decel	Separate accel/decel rates, 0-3600 sec to maximum frequency
Protective Functions	Inverter Trip	Over voltage, over current, under voltage, external trip, heatsink thermal, motor overload
	Stall Prevention	Over voltage suppression, overcurrent suppression
	External Output	2 OPTO isolated outputs, 2 relay outputs, and LED indicator for trip, 2 analog outputs
	Short Circuit	Phase to phase, phase to ground
LCD Display	Running	Output frequency, set frequency, output current(%), voltage, RPM, custom units
	Setting	Parameter values for setup and review, FWD/REV/STOP commands, JOG
	Trip	Separate message for each trip, cause of last 31 trips retained in memory
Ambient Conditions	Temperature	-10 to + 40°C For UL Listing
	Cooling/ALT.	Forced air included when required; 3300 feet max without derate

NOTE: See page 40 for dimension drawing. Data subject to change without notice. Contact Baldor for certified data.

Series 18H Washdown Vector

When used with a Baldor Washdown Vector Drive® motor, or other motors with a feedback device, Baldor 18H Washdown Vector controls provide precise positioning, speed control and holding torque, plus full-rated torque at zero speed. Ideal for food processing conveyor applications with load variations and frequent stop/starts. These controls may be used in new installations, replacements or original equipment. Features include a NEMA 4X enclosure that can stand up to frequent washdowns, and a 32-character alphanumeric keypad for easy set-up and adjustment.

230 and 460 Volt

			Constant Torque Output Ratings with 2.5 KHz PWM Frequency			Quiet Drive Output Ratings with 8.0 KHz PWM Frequency		
				Output Current			Output Current	
Catalog No.	**Size**	**Volt**	**Hp**	**Cont.**	**Peak**	**Hp**	**Cont.**	**Peak**
				230 Volt				
ID18H201-W	A	230	1	4.2	8.4	0.75	3.2	6.4
ID18H202-W	A	230	2	7	14	1	4.2	8.4
ID18H203-W	A	230	3	10	20	2	7	14
ID18H205-W	A	230	5	16	32	3	10	20
ID18H207-W	B	230	7.5	22	38	5	16	32
ID18H210-W	B	230	10	28	56	7.5	22	44
ID18H215-W	B	230	15	42	71	10	28	56
				460 Volt				
ID18H401-W	A	460	1	2.1	4.2	0.75	1.6	3.2
ID18H402-W	A	460	2	4	8	1	2.1	4.2
ID18H403-W	A	460	3	5	10	2	4	8
ID18H405-W	A	460	5	8	16	3	5	10
ID18H407-W	A	460	7.5	11	22	5	8	16
ID18H410-W	B	460	10	14	28	7.5	11	22
ID18H415-W	B	460	15	21	36	10	15	30

Output Ratings	Overload Capacity	150% for 60 seconds, 170-200% for 3 seconds for constant torque
		115% for 60 seconds for variable torque
	Frequency	0-500 Hz
	Voltage	0-maximum input voltage (RMS)
Input Ratings	Frequency	50 or 60 Hz ±5%
	Voltage	200-240 VAC ±10%, 380-480 VAC ±10%; 550-600 VAC ±10%
	Phase	Three phase (or single phase with derate)
	Impedance	3% minimum required for Size A and B
Control Spec	Control Method	Microprocessor controlled PWM output
	PWM Frequency	Adjustable 1-5kHz STD, 1-16 kHz quiet
	Speed Setting	±5 VDC, 0-5 VDC ±10 VDC, 0-10 VDC, 4-20 mA; digital via keypad, RS232/485, PID process loop
	Accel/Decel	0-3600 sec.
	Motor Matching	Automatic tuning to motor with manual override
Motor Feedback	Feedback Type	Incremental encoder coupled to motor shaft; marker pulse required for position orient
	Pulses/Rev/Volts	60-15,000 selectable, 1024 standard; 2 channel in quadrature, 5 VDC, differential
	Power Input	5 VDC, 300 mA maximum
	Positioning	Optional buffered encoder pulse train output for position loop controller
Protective Functions	Vector Trip	Missing control power, over current, over voltage, under voltage, motor over speed, motor overload
	External Output	LED indicator for trip conditions, 4 assignable logic outputs, 2 assignable analog outputs 0-5 VDC
	Short Circuit	Phase to phase, phase to ground
LED Display	Running	Output frequency, motor RPM; output current, voltage (selectable)
	Setting	Parameter values for setup and review, FWD/REV/Stop command; JOG
	Trip	Separate message for each trip, last 31 trips retained in memory
Ambient Conditions	Temperature	-10 to 40°C for UL listing
	Cooling/ALT.	Forced air included when required; 3300 feet max without derate

NOTE: See page 40 for dimension drawing. Data subject to change without notice. Contact Baldor for certified data.

Paint-Free SCR Drive Permanent Magnet DC Motors

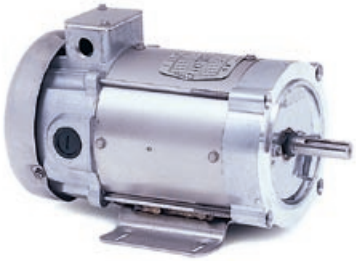

In DC motor applications where caustic cleaning solutions and regular high-pressure wash downs may compromise the surface of a painted motor, Baldor offers Paint-Free DC motors. These motors have the same reliability-enhancing features as Baldor's Washdown Duty DC motors.

Performance Data: TEFC - Totally Enclosed Fan Cooled, 1/4 through 1 Hp

Hp	kW	RPM	Frame	Catalog No.	Voltage Direct Current Armature	Full Load Amperage Armature	Constant Torque Speed Range	Bearing		"C" Dim.	Conn. Diagram
								DE	ODE		
0.25	0.18	1750	56C	CDPSWD3410	90	2.7	20:1	6203	6203	12.16	CD0194
0.5	0.37	1750	56C	CDPSWD3430	90	5.2	20:1	6203	6203	13.66	CD0194
1	0.75	1750	56C	CDPSWD3545	90	9.6	20:1	6205	6205	16.30	CD0194
0.25	0.18	1750	56C	CDPSWD3406	180	1.3	20:1	6203	6203	12.16	CD0194
0.5	0.37	1750	56C	CDPSWD3426	180	2.5	20:1	6203	6203	13.60	CD0194
1	0.75	1750	56C	CDPSWD3555	180	4.9	20:1	6205	6205	16.30	CD0194

NOTE: See page 34 for dimension drawing. See page 38 for Connection Diagrams.

Washdown Duty SCR Drive Permanent Magnet DC Motors

These DC motors are suited for food processing conveyor and feeder applications that are exposed to high-pressure washdowns. Reliability-enhancing features include: Moisture sealant on bolt heads between the frame and endplates; neoprene gasket on conduit box; double sealed ball bearings; Forsheda running contact V-ring slinger; stainless steel shaft. These motors are adaptable for use with tachometers. If closed loop operation is desired, use with Baldor Washdown Duty tachometers and tach mounting kits.

Performance Data: TENV - Totally Enclosed Non-Vented and TEFC - Totally Enclosed Fan Cooled, 1/4 through 5 Hp

Hp	kW	RPM	Frame	Catalog No.	Voltage Direct Current Armature	Full Load Amperage Armature	Constant Torque Speed Range	Bearing		"C" Dim.	Conn. Diagram
								DE	ODE		
0.25	0.18	1750	56C	CDPWD3310 ▮	90	2.5	20:1	6203	6203	12.25	CD0194
0.33	0.25	1750	56C	CDPWD3320 ▮	90	3.2	20:1	6203	6203	13.19	CD0194
0.5	0.37	1750	56C	CDPWD3330 ▮	90	4.8	20:1	6203	6203	14.94	CD0194
0.75	0.56	1750	56C	CDPWD3440	90	7.6	20:1	6203	6203	14.59	CD0194
1	0.75	1750	56C	CDPWD3445	90	10.0	20:1	6203	6203	15.46	CD0194
0.25	0.18	1750	56C	CDPWD3306 ▮	180	1.25	20:1	6203	6203	12.25	CD0194
0.33	0.25	1750	56C	CDPWD3316	180	1.6	20:1	6203	6203	13.19	CD0194
0.5	0.37	1750	56C	CDPWD3326	180	2.5	20:1	6203	6203	14.94	CD0194
0.75	0.56	1750	56C	CDPWD3436	180	3.7	20:1	6203	6203	14.59	CD0194
1	0.75	1750	56C	CDPWD3455	180	5.0	20:1	6203	6203	15.46	CD0194
1.5	1.1	1750	145TC	CDPWD3575	180	7.7	20:1	6205	6205	17.17	CD0194
2	1.5	1750	145TC	CDPWD3585	180	9.6	20:1	6205	6205	18.17	CD0194
3	2.2	1750	184TC	CDPWD3603	180	14.0	20:1	6206	6206	24.33	CD0194
5	3.7	1750	1810ATC	CDPWD3605	180	24.5	20:1	6206	6206	27.83	CD0194

NOTE: See page 34 for dimension drawing. See page 38 for Connection Diagrams.
Data subject to change without notice. Contact Baldor for certified data.

▮ = TENV Enclosure - See page 34 for dimensions.

NEMA 4X Washdown Duty DC SCR Controls

Baldor offers several models of Washdown Duty DC controls, all in NEMA 4X enclosures. Models include Line Regen and PMW versions. Baldor also offers a variety of Washdown Duty Control accessories, including brake-reverse kits, a run/jog switch, an auto/manual installation kit and an AC line switch kit.

BC154, BCWD140 and BC160 are one-way controls with reversal by means of switching the armature leads (BCWD140 has a forward/break/reverse switch mounted). BC254 is a line regenerative SCR control that can drive the motor to a timed stop. BC354 is a PWM control that provides low-ripple DC power to the motor allowing more Hp when used with a 140 or 280 VDC motor. All offer a choice of armature or tachometer feedback and a speed or torque mode. Output current is jumper selectable. BC154, BC160, BC254 and BC354 are painted black and come with a start-stop switch. BCWD140 comes with white epoxy paint and also forward/break/reverse and run-jog switches.

115 and 230 Volt, Single Phase

Hp Range	Catalog No.	Input Voltage	Description Input Voltage / Max. Hp	Ap'x. Shpg. Wgt.
NEMA 4X SCR				
1/4-2	BC154	115/230	120V - 1 Hp, 230V - 2 Hp	5
3	BC160	230	230V - 3 Hp	3
NEMA 4X Washdown Duty SCR				
1/4-2	BCWD140	115/230	120V - 1 Hp, 230V - 2 Hp	6
NEMA 4X Washdown Duty Line Regen SCR				
1/8-2	BC254	115/230	120V - 1 Hp, 230V - 2 Hp	5
NEMA 4X Washdown Duty PMW DC *				
1/4-2	BC354	115/230	120V - 1 Hp, 230V - 2 Hp	5

NOTE: * Output current is 7.5 amps; Output voltage is 140VDC for 115VAC input - 280VDC for 230VAC input. Motors designed for these voltages will give the best performance. See page 42 for dimension drawing.

DC SCR Washdown Duty Control Accessories

Catalog No.	Description	Ap'x Shpg. Wgt.
BC153	Electronic Forward-Dynamic Brake-Reverse Kit for BC154	1
BC156	Mechanical Forward-Dynamic Brake-Reverse Switch for BC154	1
BC157	Run/Jog switch for BC154 & BC160	1
BC158	Auto/Manual Installation Kit for BC145 signal isolator for BC154 & BC160	1
BC159	AC Line Switch Kit for BC154, BCWD140	1

Washdown Tachometers

When looking to improve regulation of a Washdown Duty SCR motor control under varying speed and load conditions, Baldor Washdown Tachometers provide basic motor feedback. Two models of tachs are available from stock, both with washdown IP65 enclosures. Tach mounting kits are also available from Baldor.

DC Tach Generators Motor, PY Flange Mounting

Catalog Number	Type	Voltage	Weight LBS.
PTGWD50XPS	XPYII	50 VDC/1000 RPM	15
PTGWD100XPS	XPYII	100 VDC/1000 RPM	15

Stainless Steel Brushless AC Servo Motors

Baldor's Stainless Steel Brushless Servo Motors provide excellent performance, and represent the industry's most durable, rugged, and compact design in a cost effective package.
The SSBSM all stainless steel motors are available in standard and low inertia models to provide for ideal inertial matching in your machine. This series is rated IP67 and can withstand 1500 psi washdown conditions. Available in 5 frame sizes, the SSBSM series provide continuous torques to 280 lb-in (32 N-m) with peaks of 3-4 times.

Stainless Steel Brushless AC Servo Motors

Cont. Stall Torque		Cont. Stall Current Amps	Nominal Bus Volts	Speed (RPM)	Inertia		Motor Catalog Number ①	Connection Diagram	
(Lb-In)	(Nm)				(Lb-In-Sec²)	(Kg-cm²)		Resolver	Encoder
3.9	0.45	0.8	300	4000	0.00006	0.07	SSBSM50N-175C*	CD1808	CD1297A04
18.5	1.7	2.8	300	4000	0.0005	0.56	SSBSM63N-375C*	CD1808	CD1297A04
8	0.9	1.9	300	4000	0.0016	1.81	SSBSM80C-175C*	CD1808	CD1297A04
16.8	1.9	2.6	300	4000	0.0033	3.73	SSBSM80C-275C*	CD1808	CD1297A04
30	3.4	5	300	4000	0.0066	7.45	SSBSM80C-475C*	CD1808	CD1297A04
55	6.2	4.8	300	2000	0.0117	13.2	SSBSM90C-3150C*	CD1808	CD1297A04
100	11.3	9.1	300	2400	0.0448	50.6	SSBSM100C-3150C*	CD1808	CD1297A04

NOTES: 1) Standard configuration: all motors supplied with IEC square mounting flange. In place of * specify "A" for Resolver, "F" for 2500 PPR Encoder.
2) SSBSM Series have two (2) threaded connectors for resolver and motor terminations.
3) Order cable assemblies as separate items.
4) Brake version available as custom. Contact Baldor.

Dimension Drawing

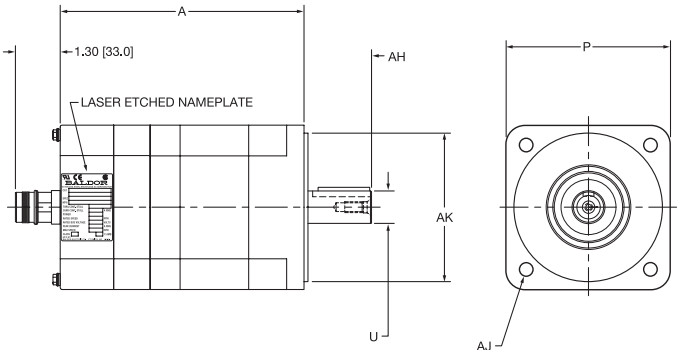

SSBSM Shaft and Mounting Dimensions

Motor Code	U Shaft Dia.	AH Shaft Length	AJ Mounting Holes & B.C.D.	AK Pilot Dia.
SSBSM50	.35(9)	.8(20)	4.5mm thru on 63mm B.C.	1.5(40)
SSBSM63	.43(11)	.9(23)	6mm thru on 75mm B.C.	2.3(60)
SSBSM80	.74(19)	1.6(40)	7mm thru on 100mm B.C.	3.1(80)
SSBSM90	.94(24)	2(50)	10mm thru on 130mm B.C.	4.3(110)
SSBSM100	1.1(28)	2.3(60)	12mm thru on 165mm B.C.	5.1(130)

Dimensions inches (mm)

SSBSM Size and Length Dimensions

Motor Code	P	L
SSBSM50N-1	2.2(57)	5.8(147)
SSBSM63N-3	2.7(69)	8(204)
SSBSM80-1	3.6(91.3)	7.4(188)
SSBSM80-2	3.6(91.3)	8.4(212)
SSBSM80-4	3.6(91.3)	10.4(263)
SSBSM90-3	4.7(121.7)	10.1(256)
SSBSM100-3	5.8(148)	10.5(268)

Dimensions inches (mm)

Stainless Steel Servo Rated Gearheads

For use with Baldor's SSBSM servo motors

Features: This custom gearhead easily mounts, and is specifically designed for use with Baldor's Stainless Steel Servo Motors. Available in planetary and right-angle. They are durable, highly efficient, and provide long trouble-free operation. Designed with low backlash to reduce shock loads in dynamic applications.

High Torque Gearhead

High Torque Gearhead		
	Number of Stages	**Ratios Available**
MSS 080	1	3-4-5-7-10
	2	16-20-25-35-40-50-70-100
MSS 115	1	3-4-5-7-10
	2	16-20-25-35-40-50-70-100
MSS 140	1	3-4-5-7-10
	2	16-20-25-35-40-50-70-100

Right Angle Gearhead

Right Angle Gearhead		
	Number of Stages	**Ratios Available**
MRS 080	1	3-4-5-7-10
	2	16-20-25-35-50-70-100
MRS 115	1	3-4-5-7-10
	2	16-20-25-35-50-70-100
MRS 140	1	3-4-5-7-10
	2	16-20-25-35-50-70-100

NOTE: 1) How to order: state Baldor servo motor model number, gearhead type (MSS), ratio and backlash.
2) Ordering nonmenclature: GBSM80-MSS080-3

G BSM90 - MSS115 - 3
Gear Motor Gearhead type Ratio

3) Gears provide standard 10 arc-min maximum backlash
4) Dimensions in mm

MSS080

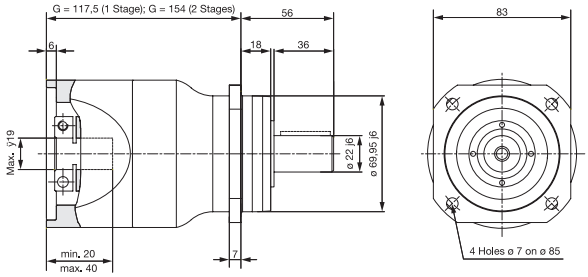

MRS080

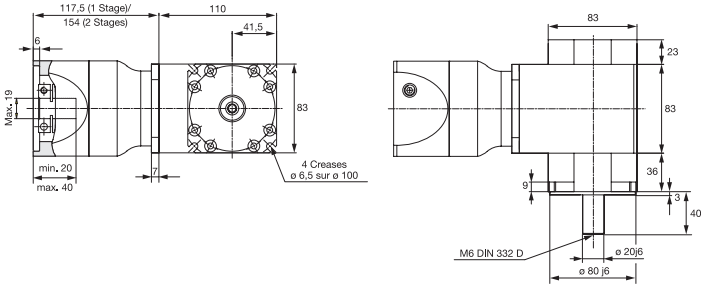

MSS115

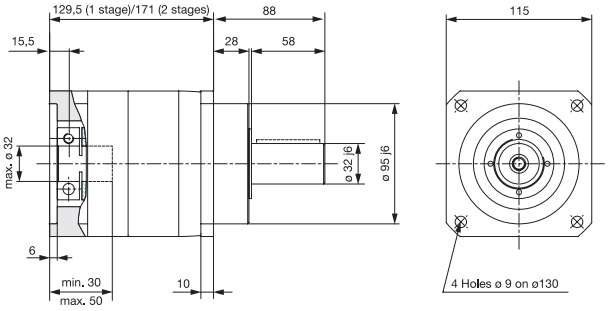

MRS115

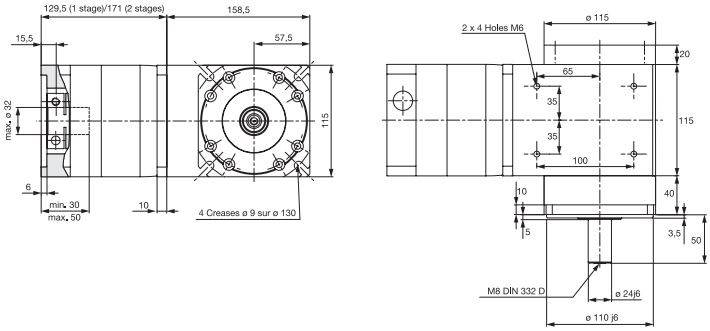

MSS140

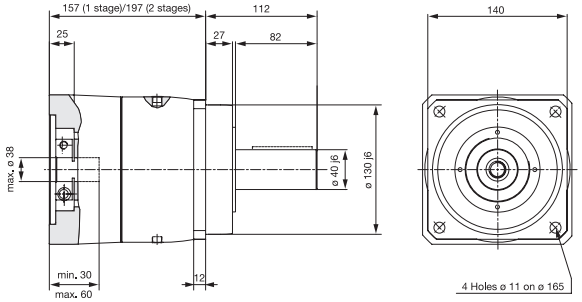

MRS140

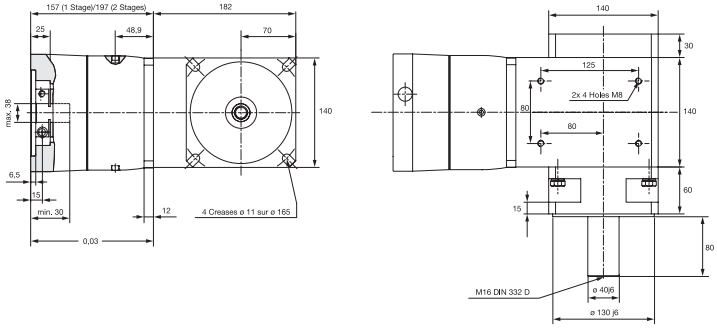

Series 23H Washdown Servo Controls

These servo controls are ideal for applications that require precise speed control in a washdown environment, including food and pharmaceutical processing and packaging. Baldor's H Series controls interface well with existing motion controllers as they use the industry standard ±10 VDC input command. These controls are fully protected. Features include a NEMA 4X enclosure that stands up to frequent washdowns, and a 32-character alphanumeric keypad for easy set-up and adjustment. Recommended for use with Baldor Stainless Steel Series Brushless AC motors with resolver feedback.

230 Volt

			Quiet Drive Output Ratings with 8.0 KHz PWM Frequency		Constant Torque Output Ratings with 2.5 KHz PWM Frequency		
			Output Current			Output Current	
Catalog No.	**Size**	**Volt**	**Cont.**	**Peak**	**Hp**	**Cont.**	**Peak**
SD23H2A04-W	A	230	4.2	8.4	2	7	14
SD23H2A10-W	A	230	10	20	5	16	32

Output Ratings	Overload Capacity	150% for 60 seconds, 200% for 3 seconds for constant torque
		115% for 60 seconds for variable torque
	Frequency	0-500 Hz
	Voltage	0-maximum input voltage (RMS)
Input Ratings	Frequency	50 or 60 Hz ±5%
	Voltage	200-240 VAC ±10%
	Phase	Three phase (or single phase with derate)
	Impedance	3% minimum required for Size A
Control Spec	Control Method	Microprocessor controlled PWM output
	PWM Frequency	Standard 8 kHz Adjustable 1-16 kHz with derating between 8-16 kHz
	Speed Setting	±5 VDC, 0-5 VDC ±10 VDC, 0-10 VDC, 4-20 mA; digital via keypad, RS232/485, PID process loop
	Accel/Decel	0-3600 sec.
	Motor Matching	Automatic tuning to motor with manual override
Motor Feedback	Feedback Type	Resolver
	Sine & Cosine Inputs	2V rms ±10%
	Excitation (Ref. Voltage)	4 Vrms @ 10 kHz
	Transformation Ratio	0.5 only
	Simulated encoder output	(to positioner) 1024ppr; 2 channel in quadrature, 5VDC, differential
Protective Functions	Vector Trip	Missing control power, over current, over voltage, under voltage, motor over speed, motor overload
	External Output	LED indicator for trip conditions, 4 assignable logic outputs, 2 assignable analog outputs 0-5 VDC
	Short Circuit	Phase to phase, phase to ground
LED Display	Running	Output frequency, motor RPM; output current, voltage (selectable)
	Setting	Parameter values for setup and review, FWD/REV/Stop command; JOG
	Trip	Separate message for each trip, last 31 trips retained in memory
Ambient Conditions	Temperature	-10 to 40°C for UL listing
	Cooling/ALT.	Forced air included when required; 3300 feet max without derate

NOTE: See page 40 for dimension drawing. Data subject to change without notice. Contact Baldor for certified data.

Stainless Steel Right Angle, Quill Type Gear Reducer

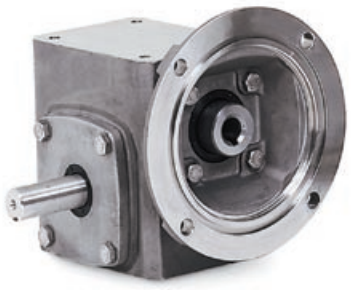

These stainless steel, solid shaft reducers are designed for applications where use of caustic cleaning solutions and regular high-pressure wash downs may compromise the surface of a painted gear reducer. They are ideal for food, pharmaceutical or chemical processing.

Features include: Housings, output shaft & hardware are stainless steel to endure hostile environments. The new totally enclosed, vent-less, o-ring sealed system is pre-filled with Klubersynth UH1-6-460 synthetic lubricant. The lubricant accommodates a wide range of operating temperatures and runs cooler than other popular synthetics, providing maintenance-free lubed for life operation. In addition, it is suitable for food grade (H1) applications. Units are also BISSC certified (Baking Industry Sanitation Standards Committee).

Solid Shaft Reducers

Nominal Output RPM @ 1750 RPM In	Gear Ratio	Continuous Duty Output Torque (In-Lbs) Based on 1750 RPM Motor									Max Input Hp	Max Output Torque Rating In-Lbs	NEMA Motor Mount	Style No.	Catalog No.	Ap'x Shpg. Wgt.
		0.25	0.33	0.5	0.75	1	1.5	2	3	5						
350	5					160	240	320			2.00	320	56C	SSF-918-05-B5-G	SSGF0518AG	25
	5					160	240	320			2.00	320	140TC	SSF-918-05-B7-G	SSGF0518BG	25
	5						246	327	491		3.14	514	140TC	SSF-921-05-B7-G	SSGF0521BG	31
	5							339	508	847	5.43	919	140TC	SSF-926-05-B7-G	SSGF0526BG	54
175	10				214	285	428				1.50	428	56C	SSF-918-10-B5-G	SSGF1018AG	25
	10				214	285	428				1.50	428	140TC	SSF-918-10-B7-G	SSGF1018BG	25
	10					312	468	624			2.02	630	140TC	SSF-921-10-B7-G	SSGF1021BG	31
	10							655	983		3.59	1177	140TC	SSF-926-10-B7-G	SSGF1026BG	54
117	15			209	314	419					1.07	448	56C	SSF-918-15-B5-G	SSGF1518AG	25
	15			246	369	492					1.35	664	56C	SSF-921-15-B5-G	SSGF1521AG	31
	15					473	710	947			2.58	1225	140TC	SSF-926-15-B7-G	SSGF1526BG	54
88	20		165	251	376						0.92	461	56C	SSF-918-20-B5-G	SSGF2018AG	25
	20			212	484	645					1.06	684	56C	SSF-921-20-B5-G	SSGF2021AG	31
	20					609	913	1218			2.15	1308	140TC	SSF-926-20-B7-G	SSGF2026BG	54
70	25		183	277	416						0.80	444	56C	SSF-918-25-B5-G	SSGF2518AG	25
	25		250	379	569						0.89	675	56C	SSF-921-25-B5-G	SSGF2521AG	31
	25				567	756	1134				1.73	1307	140TC	SSF-926-25-B7-G	SSGF2526BG	54
58	30		216	327							0.72	470	56C	SSF-918-30-B5-G	SSGF3018AG	25
	30		275	416	624						0.83	691	56C	SSF-921-30-B5-G	SSGF3021AG	31
	30				641	854	1281				1.54	1313	140TC	SSF-926-30-B7-G	SSGF3026BG	54
44	40	180	238	360							0.64	461	56C	SSF-918-40-B5-G	SSGF4018AG	25
	40		340	515							0.66	680	56C	SSF-921-40-B5-G	SSGF4021AG	31
	40			524	786	1049					1.23	1296	140TC	SSF-926-40-B7-G	SSGF4026BG	54
35	50	222	294								0.49	436	56C	SSF-918-50-B5-G	SSGF5018AG	25
	50	280	370	561							0.58	651	56C	SSF-921-50-B5-G	SSGF5021AG	31
	50			621	932	1242					1.00	1242	56C	SSF-926-50-B5-G	SSGF5026AG	54
29	60	220	290								0.47	413	56C	SSF-918-60-B5-G	SSGF6018AG	25
	60	317	418	634							0.50	634	56C	SSF-921-60-B5-G	SSGF6021AG	31
	60		473	716	1074						0.82	1166	56C	SSF-926-60-B5-G	SSGF6026AG	54

NOTE:
- Service Class I Torque Ratings
- Service Class II Torque Ratings
- Service Class III Torque Ratings

NOTE: See page 44 for dimension drawing.
See page 30 for optional Stainless Steel bases.
Data subject to change without notice. Contact Baldor for certified data.

Stainless Steel Right Angle, Quill Type Gear Reducer

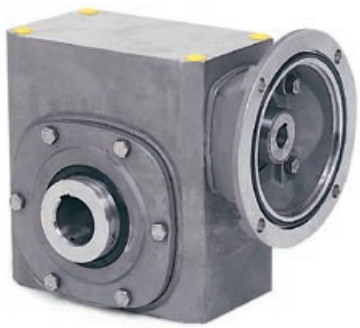

These stainless steel, hollow bore reducers are designed for applications where use of caustic cleaning solutions and regular high-pressure wash downs may compromise the surface of a painted gear reducer. They are ideal for food, pharmaceutical or chemical processing.

Features include: Housings, output shaft & hardware are stainless steel to endure hostile environments. The new totally enclosed, vent-less, o-ring sealed system is pre-filled with Klubersynth UH1-6-460 synthetic lubricant. The lubricant accommodates a wide range of operating temperatures and runs cooler than other popular synthetics, providing maintenance-free lubed for life operation. In addition, it is suitable for food grade (H1) applications. Units are also BISSC certified (Baking Industry Sanitation Standards Committee).

Hollow Bore Gear Reducers

Nominal Output RPM @ 1750 RPM In	Gear Ratio	Continuous Duty Output Torque (In-Lbs) Based on 1750 RPM Motor							Max Input Hp	Max Output Torque Rating In-Lbs	NEMA Motor Mount	Style No.	Catalog No.	Ap'x Shpg. Wgt.
		0.25	0.33	0.5	0.75	1	1.5	2						
350	5					160	240	320	2.00	320	56C	SSHF-918-05-B5-H	SSGHF0518AH	27
175	10				214	285	428		1.50	428	56C	SSHF-918-10-B5-H	SSGHF1018AH	27
	10					312	468	624	2.02	630	56C	SSHF-921-10-B5-H	SSGHF1021AH	33
117	15			209	314	419			1.07	448	56C	SSHF-918-15-B5-H	SSGHF1518AH	27
	15			246	369	492			1.35	664	56C	SSHF-921-15-B5-H	SSGHF1521AH	33
88	20		165	251	376				0.92	461	56C	SSHF-918-20-B5-H	SSGHF2018AH	27
	20			323	484	645			1.06	684	56C	SSHF-921-20-B5-H	SSGHF2021AH	33
	20					609	913	1218	2.15	1309	56C	SSHF-926-20-B7-H	SSGHF2026AH	57
58	30		216	327					0.72	470	56C	SSHF-918-30-B5-H	SSGHF3018AH	27
	30		275	416	624				0.83	691	56C	SSHF-921-30-B5-H	SSGHF3021AH	33
	30				641	854	1281		1.54	1313	56C	SSHF-926-30-B5-H	SSGHF3026AH	57
44	40	180	238	360					0.64	461	56C	SSHF-918-40-B5-H	SSGHF4018AH	27
	40		340	515					0.66	680	56C	SSHF-921-40-B5-H	SSGHF4021AH	33
	40			524	786	1049			1.23	1296	140TC	SSHF-926-40-B7-H	SSGHF4026BH	57
35	50	222	294						0.49	436	56C	SSHF-918-50-B5-H	SSGHF5018AH	27
	50	280	370	561	932	1242			0.58	651	56C	SSHF-921-50-B5-H	SSGHF5021AH	33
29	60	220	290						0.47	413	56C	SSHF-918-60-B5-H	SSGHF6018AH	27
	60	317	418	634					0.50	634	56C	SSHF-921-60-B5-H	SSGHF6021AH	33
	60		473	716	1074				0.82	1166	56C	SSHF-926-60-B5-H	SSGHF6026AH	57

NOTE:
- Service Class I Torque Ratings
- Service Class II Torque Ratings
- Service Class III Torque Ratings

NOTE: See page 44 for dimension drawing.
Data subject to change without notice. Contact Baldor for certified data.

Optional Stainless Steel Base Kits

Base	Size	Catalog Number	Weight	A	B	C	D	E	F	G	H
Horiz	918 (A,B)	SSB18H71	8	0.62	4.50	5.56	0.44	0.69	0.62	5.75	7.00
Horiz	921 (A,B)	SSB21H71	10	0.66	4.69	5.76	0.50	0.72	0.66	6.38	7.69
Horiz	926 (A,B)	SSB26H71	13	0.63	5.25	6.50	0.56	0.75	0.63	8.00	9.25

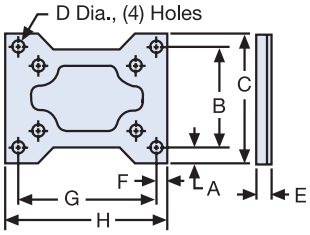

Washdown Right Angle, Quill Type Gear Reducer

These solid shaft gear reducers are great for food processing and other applications where the unit is exposed to regular, high-pressure washdowns.

Features include: Cast iron housing is coated with an FDA approved epoxy for corrosion prevention. Output shaft & hardware are stainless steel to endure caustic washdown environments. The new totally enclosed, vent-less, o-ring sealed system is pre-filled with Klubersynth UH1-6-460 synthetic lubricant. The lubricant accommodates a wide range of operating temperatures and runs cooler than other popular synthetics, providing maintenance-free lubed for life operation. In addition, it is suitable for food grade (H1) applications. Units are also BISSC certified (Baking Industry Sanitation Standards Committee).

Nominal Output RPM @ 1750 RPM In	Gear Ratio	Continuous Duty Output Torque (In-Lbs) Output Based on 1750 RPM Motor							Max Input Hp	Max Torque Rating In-Lbs	NEMA Motor Mount	Style No.	Catalog No.	Ap'x Shpg. Wgt.
		0.25	0.33	0.5	0.75	1	1.5	2						
350	5					160	240	320	2.00	320	56C	WDF-918-05-B5-G	WDGF0518AG	25
175	10		82	125	187				0.90	225	56C	WDF-913-10-B5-G	WDGF1013AG	15
	10			141	211	282			1.03	290	56C`	WDF-915-10-B5-G	WDGF1015AG	25
	10				214	285	428		1.50	428	56C	WDF-918-10-B5-G	WDGF1018AG	25
	10					312	468	624	2.02	630	56C	WDF-921-10-B5-G	WDGF1021AG	31
	10					317	475	634	2.73	893	140TC	WDF-924-10-B7-G	WDGF1024BG	38
117	15	89	118	179					0.66	225	56C	WDF-913-15-B5-G	WDGF1513AG	15
	15		127	193	289				0.81	312	56C	WDF-915-15-B5-G	WDGF1515AG	25
	15			209	314	419			1.07	448	56C	WDF-918-15-B5-G	WDGF1518AG	25
	15			246	369	492			1.35	664	56C	WDF-921-15-B5-G	WDGF1521AG	31
	15					470	705	939	2.11	992	56C	WDF-924-15-B5-G	WDGF1524AG	38
88	20	113	149	226					0.53	239	56C	WDF-913-20-B5-G	WDGF2013AG	15
	20	128	169	256					0.62	317	56C	WDF-915-20-B5-G	WDGF2015AG	25
	20		165	251	376				0.92	461	56C	WDF-918-20-B5-G	WDGF2018AG	25
	20					609	913	1218	2.15	1309	140TC	WDF-926-20-B7-G	WDGF2026BG	54
88	30		216	327					0.72	470	56C	WDF-918-30-B5-G	WDGF3018AG	25
	30		275	416	624				0.83	691	56C	WDF-921-30-B5-G	WDGF3021AG	31
	30			420	630	840			1.32	111	56C	WDF-924-30-B5-G	WDGF3024AG	38
	30				641	854	1281		1.54	1313	56C	WDF-926-30-B5-G	WDGF3026AG	54
	30					881	1322	1763	2.81	2462	140TC	WDF-932-30-B7-G	WDGF3032BG	97

NOTE:
- Service Class I Torque Ratings
- Service Class II Torque Ratings
- Service Class III Torque Ratings

NOTE: See page 43 for dimension drawing.
Data subject to change without notice. Contact Baldor for certified data.

Washdown Right Angle, Quill Type Gear Reducer continued…

Nominal Output RPM @ 1750 RPM In	Gear Ratio	Continuous Duty Output Torque (In-Lbs) Output Based on 1750 RPM Motor							Max Input Hp	Max Torque Rating In-Lbs	NEMA Motor Mount	Style No.	Catalog No.	Ap'x Shpg. Wgt.
		0.25	0.33	0.5	0.75	1	1.5	2						
44	40	180	238	360					0.64	461	56C	WDF-918-40-B5-G	WDGF4018AG	25
	40		340	515					0.66	680	56C	WDF-921-40-B5-G	WDGF4021AG	31
	40			521	781				0.99	1030	56C	WDF-924-40-B5-G	WDGF4024AG	38
	40			524	786	1049			1.23	1296	56C	WDF-926-40-B5-G	WDGF4026AG	54
	40					1081	1622	2163	2.20	2374	140TC	WDF-932-40-B7-G	WDGF4032BG	97
35	50	177	234						0.33	234	56C	WDF-913-50-B5-G	WDGF5013AG	15
	50	280	370	561					0.58	651	56C	WDF-921-50-B5-G	WDGF5021AG	31
	50		401	608	912				0.83	1014	56C	WDF-924-50-B5-G	WDGF5024AG	38
	50			621	932	1242			1.00	1242	56C	WDF-926-50-B5-G	WDGF5026AG	54
29	60	218	288						0.33	288	56C	WDF-915-60-B5-G	WDGF6015AG	25
	60	220	290						0.47	413	56C	WDF-918-60-B5-G	WDGF6018AG	25
	60	317	418	634					0.50	634	56C	WDF-921-60-B5-G	WDGF6021AG	31
	60		458	693					0.69	956	56C	WDF-924-60-B5-G	WDGF6024AG	38
	60		473	716	1074				0.82	1166	56C	WDF-926-60-B5-G	WDGF6026AG	54
	60				1100	1467	2200		1.54	2255	56C	WDF-932-60-B5-G	WDGF6032AG	97

NOTE:
- Service Class I Torque Ratings
- Service Class II Torque Ratings
- Service Class III Torque Ratings

NOTE: Optional Shaft Positions, Base Installation and Motor Mounting available through Mod Express. Refer to a Baldor District Office for pricing and delivery.
See page 343 for dimension drawing.
Data subject to change without notice. Contact Baldor for certified data.

Optional Gear Reducer Base Kits

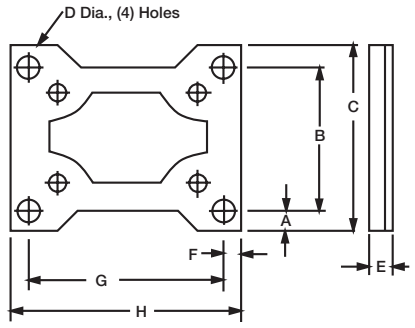

Base	Size (Position)	Catalog Number	A	B	C	D	E	F	G	H	Ap'x Wgt. Lbs.
Horiz.	913 (A,B)	WDB13H71	0.44	3.31	4.19	0.34	0.53	0.50	4.38	5.38	2
Horiz.	915 (A,B)	WDB15H71	0.57	4.31	5.44	0.41	0.60	0.60	5.25	6.44	6
Horiz.	918 (A,B)	WDB18H71	0.59	4.50	5.69	0.41	0.69	0.63	5.75	7.00	6
Horiz.	921 (A,B)	WDB21H71	0.63	4.69	5.94	0.47	0.72	0.9	6.38	7.75	6
Horiz.	924 (A,B)	WDB24H71	0.66	4.88	6.19	0.47	0.75	0.72	7.06	8.50	7
Horiz.	926 (A,B)	WDB26H71	0.70	5.25	6.66	0.53	0.75	0.81	8.00	9.63	9
Horiz.	930 (A,B)	WDB30H71	0.78	5.88	7.50	0.53	0.75	0.81	8.44	10.00	6
Horiz.	932 (A,B)	WDB32H71	0.77	6.13	7.66	0.53	0.88	0.84	9.50	11.19	13

Dimension Drawings

Washdown NEMA 56 through 256TC

TENV Enclosure

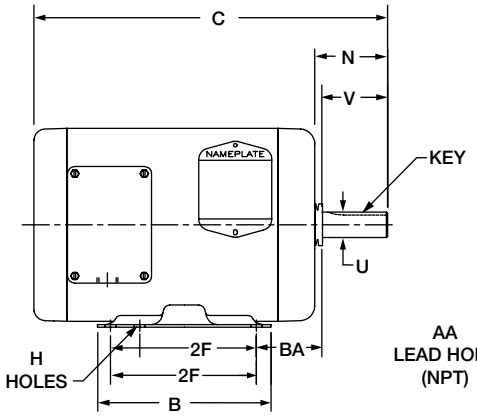

Base Mount

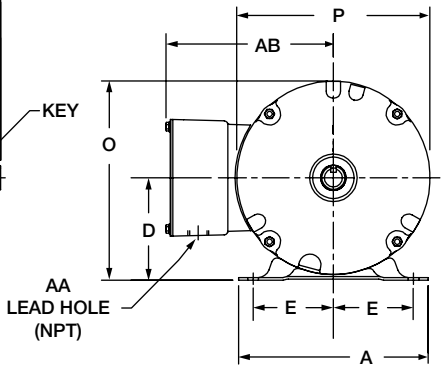

TEFC Enclosure

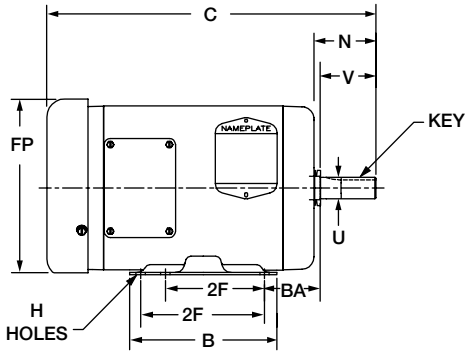

TENV Enclosure

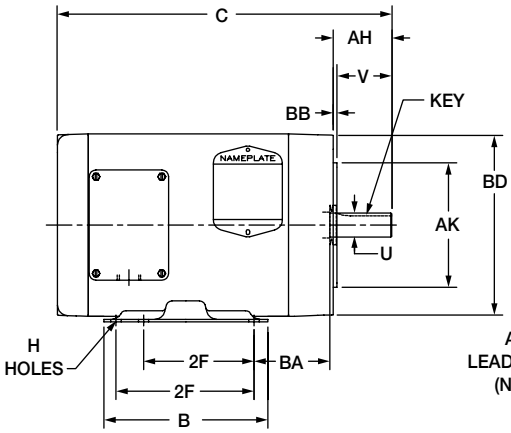

C-face with or without Base

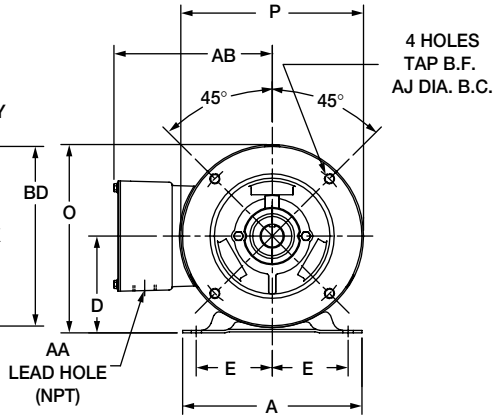

TEFC Enclosure

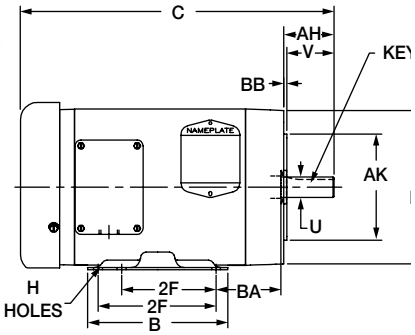

Catalog No. starting with “C” = C-face with base.
Catalog No. starting with “V” = C-face, no base.

NEMA Frame	A	B	D	E	2F	H	N	O	P	U	V	AA	AB	AH	AJ	BF TAP	AK	BA	BB	BD
56	6.50	4.50	3.50	2.44	3.00	0.34	2.44	6.81	6.62	0.625	1.88	0.50	5.22	-	-	3/8-16	-	2.75	-	-
56C	6.50	4.50	3.50	2.44	3.00	0.34	-	6.81	6.62	0.625	1.88	0.50	5.22	2.06	5.88	3/8-16	4.50	2.75	0.12	6.50
143T	6.50	5.94	3.50	2.75	4.00	0.34	2.50	6.81	6.62	0.875	2.25	0.50	5.22	-	-	3/8-16	-	2.25	-	-
143TC	6.50	5.94	3.50	2.75	4.00	0.34	-	6.81	6.62	0.875	2.25	0.50	5.22	2.12	5.88	3/8-16	4.50	2.75	0.12	6.50
145T	6.50	5.94	3.50	2.75	5.00	0.34	2.50	6.81	6.62	0.875	2.25	0.50	5.22	-	-	3/8-16	-	2.25	-	-
145TC	6.50	5.94	3.50	2.75	5.00	0.34	-	6.81	6.62	0.875	2.25	0.50	5.22	2.12	5.88	3/8-16	4.50	2.75	0.12	6.50
182T	8.63	6.50	4.50	3.75	4.50	0.41	3.56	8.44	7.88	1.125	2.75	0.75	5.97	-	-	1/2-13	-	2.75	-	-
182TC	8.63	6.50	4.50	3.75	4.50	0.41	-	8.44	7.88	1.125	2.75	0.75	5.97	2.62	7.25	1/2-13	8.50	3.50	0.25	8.89
184T	8.63	6.50	4.50	3.75	5.50	0.41	3.56	8.44	7.88	1.125	2.75	0.75	5.97	-	-	1/2-13	-	2.75	-	-
184TC	8.63	6.50	4.50	3.75	5.50	0.41	-	8.44	7.88	1.125	2.75	0.75	5.97	2.62	7.25	1/2-13	8.50	3.50	0.25	8.89
213T	9.50	8.00	5.25	4.25	5.50	0.41	3.88	10.03	9.56	1.375	3.37	0.75	7.46	-	-	1/2-13	-	3.50	-	-
213TC	9.50	8.00	5.25	4.25	5.50	0.41	-	10.03	9.56	1.375	3.37	0.75	7.46	3.12	7.25	1/2-13	8.50	4.50	0.25	9.04
215T	9.50	8.00	5.25	4.25	7.00	0.41	3.88	10.03	9.56	1.375	3.37	0.75	7.46	-	-	1/2-13	-	3.50	-	-
215TC	9.50	8.00	5.25	4.25	7.00	0.41	-	10.03	9.56	1.375	3.37	0.75	7.46	3.12	7.25	1/2-13	8.50	4.50	0.25	9.04
254TC	11.25	9.50	6.25	5.00	8.25	0.53	-	12.00	11.50	1.625	4.00	1.25	8.99	3.75	7.25	1/2-13	8.50	4.75	0.25	9.44
256TC	11.25	11.25	6.25	5.00	10.00	0.53	-	12.00	11.50	1.625	4.00	1.25	8.99	3.75	7.25	1/2-13	8.50	4.75	0.25	9.44

NOTE: Dimension for reference only. Contact a Baldor District Office or www.baldor.com for the detailed dimension drawing for your specific catalog number.

Dimension Drawings

Washdown Duty Close-Coupled Pump
NEMA 143JM through 215JM

TENV Enclosure

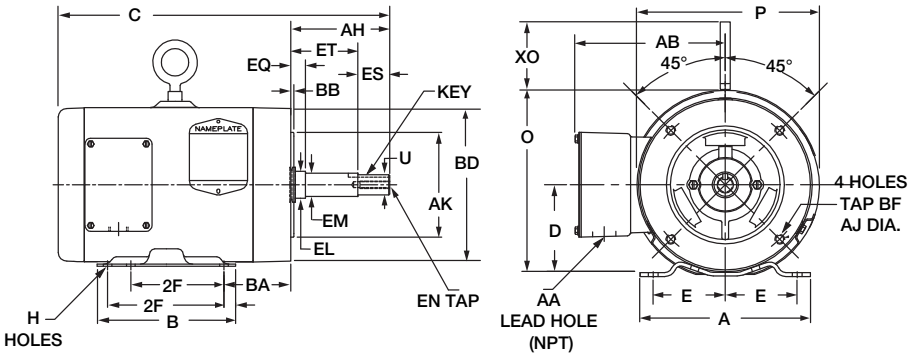

TEFC Enclosure

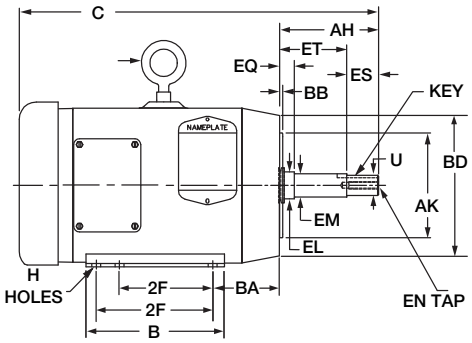

NEMA Frame	A	B	D	E	2F	H	KEY	O	P	U	AA	AB	AH	AJ	BF TAP	AK	BA	BB	BD	XO
143JM	6.50	5.94	3.50	2.75	4.00	0.34	0.19	6.81	6.63	0.875	0.50	5.73	4.25	5.88	3/8-16	4.50	2.88	0.12	6.50	—
145JM	6.50	5.94	3.50	2.75	5.00	0.34	0.19	6.81	6.63	0.875	0.50	5.73	4.25	5.88	3/8-16	4.50	2.88	0.12	6.50	—
182JM	8.63	6.50	4.50	3.75	4.50	0.41	0.19	8.44	7.88	0.875	0.75	6.86	4.25	5.88	1/2-13	4.50	3.50	0.12	6.50	2.40
184JM	8.63	6.50	4.50	3.75	5.50	0.41	0.19	8.44	7.88	0.875	0.75	6.86	4.25	5.88	1/2-13	4.50	3.50	0.12	6.50	2.40
213JM	9.50	8.00	5.25	4.25	5.50	0.41	0.19	10.03	9.56	0.875	0.75	7.45	4.25	7.25	1/2-13	8.50	4.50	0.25	9.06	2.40
215JM	9.50	8.00	5.25	4.25	7.00	0.41	0.19	10.03	9.56	0.875	0.75	7.45	4.25	7.25	1/2-13	8.50	4.50	0.25	9.06	2.40

Washdown Closed-Coupled Pump Shaft Motors

NEMA Frame	EL	EM	EN	EQ	ES	ET
143JM	1.15	1.0	0.38-16 x 0.88	0.625	1.38	2.875
145JM	1.15	1.0	0.38-16 x 0.88	0.625	1.38	2.875
182JM	1.25	1.0	0.38-16 x 0.88	0.625	1.38	2.875
184JM	1.25	1.0	0.38-16 x 0.88	0.625	1.38	2.875
213JM	1.25	1.0	0.38-16 x 0.88	0.625	1.38	2.875
215JM	1.25	1.0	0.38-16 x 0.88	0.625	1.38	2.875

NOTE: Dimension for reference only. Contact a Baldor District Office or www.baldor.com for the detailed dimension drawing for your specific catalog number.

Dimension Drawings

Washdown Inverter and Vector Motors

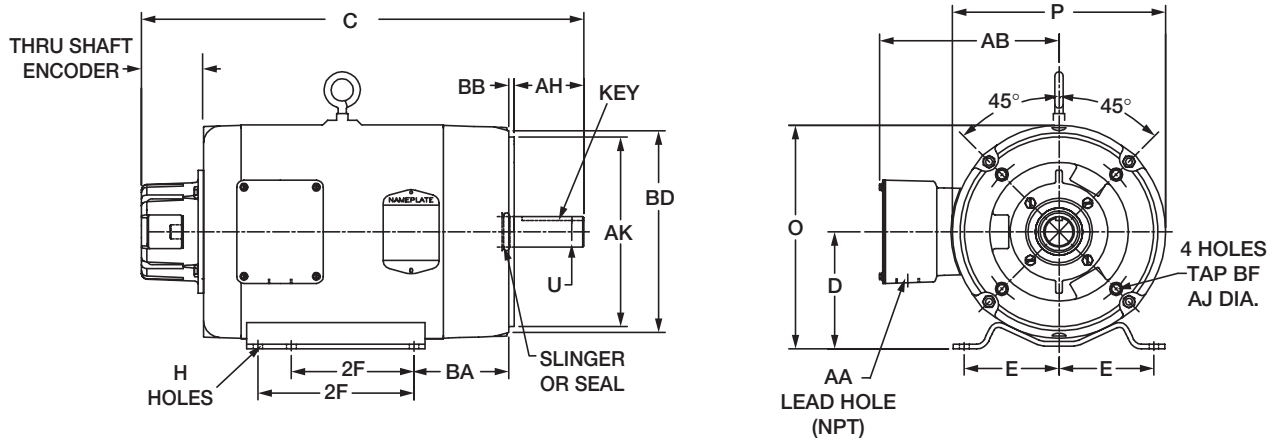

NEMA Frame	Thru Shaft Encoder	D	E	2F	H	AH	O	AB	BA	U	P	BD	AK	AJ	BF TAP	AA	BB
143TC 145TC	2.78	3.50	2.75	4.00 5.00	0.34	2.12	6.81	5.73	2.75	0.875	6.63	6.51	4.50	5.88	3/8-16	0.50	0.12
182TC 184TC	2.78	4.50	3.75	4.50 5.50	0.41	2.62	8.44	6.87	3.50	1.125	7.88	8.86	8.50	7.25	1/2-13	0.75	0.25
213TC 215TC	2.78	5.25	4.25	5.50 7.00	0.41	3.12	10.03	8.05	4.25	1.375	9.56	9.04	8.50	7.25	1/2-13	0.75	0.25
254TC 256TC	1.79*	6.25	5.00	8.25 10.00	0.53	3.75	12.00	9.72	4.75	1.625	11.69	9.44	8.50	7.25	1/2-13	1.25	0.25

NOTE: * 2.29 for Vector Motor.

Washdown Inverter

TENV Enclosure

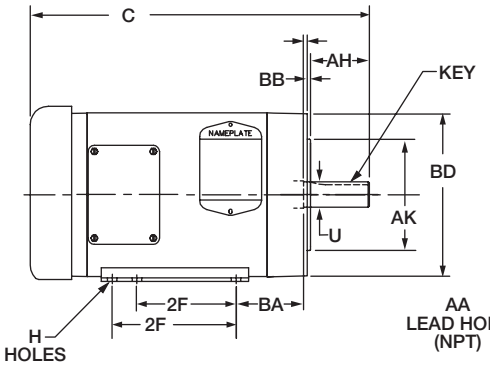

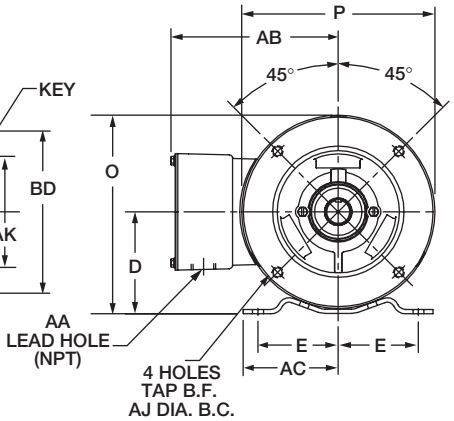

TEFC Enclosure

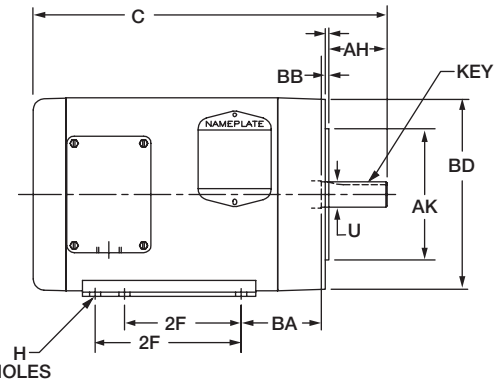

NEMA Frame	D	E	2F	H	AH	O	AB	BA	U	P	BD	AK	AJ	BF TAP	AA	BB
56C	3.50	2.44	3.00	0.34	2.06	6.81	5.73	2.75	0.625	6.62	6.50	4.50	5.88	3/8-16	0.50	0.12
143TC 145TC	3.50	2.75	4.00 5.00	0.38	2.12	6.81	5.73	2.75	0.875	6.62	6.50	4.50	5.88	3/8-16	0.50	0.12
182TC 184TC	4.50	3.75	4.50 5.50	0.41	2.62	9.00	6.56	3.5	1.125	8.50	8.86	8.50	7.25	1/2-13	0.75	0.25
213TC 215TC	5.25	4.25	5.50 7.00	0.41	3.12	10.03	7.46	4.25	1.375	10.18	9.04	8.50	7.25	1/2-13	0.75	0.25

NOTE: Dimension for reference only. Contact a Baldor District Office or www.baldor.com for the detailed dimension drawing for your specific catalog number.

Dimension Drawings

Washdown Single Phase

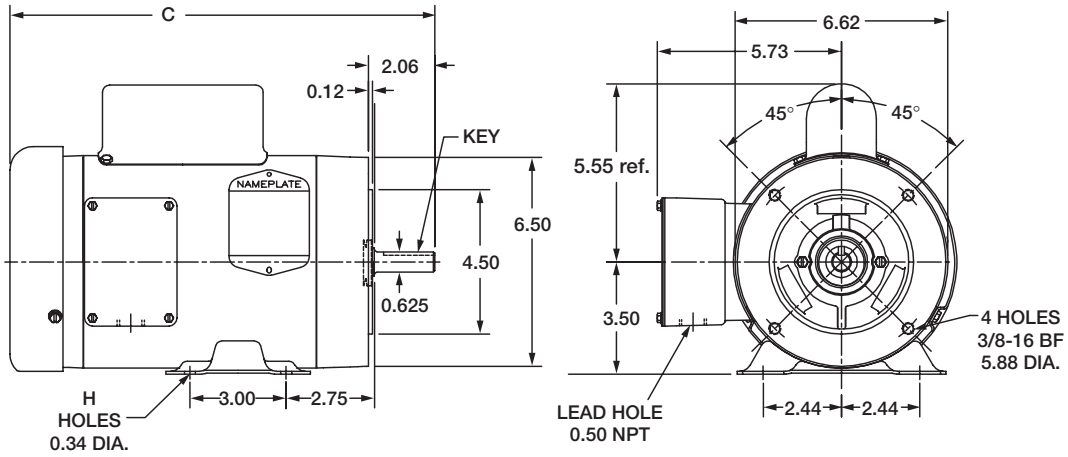

Catalog No. starting with “C” = C-face with base.
Catalog No. starting with “V” = C-face, no base.

Washdown Feather Picker

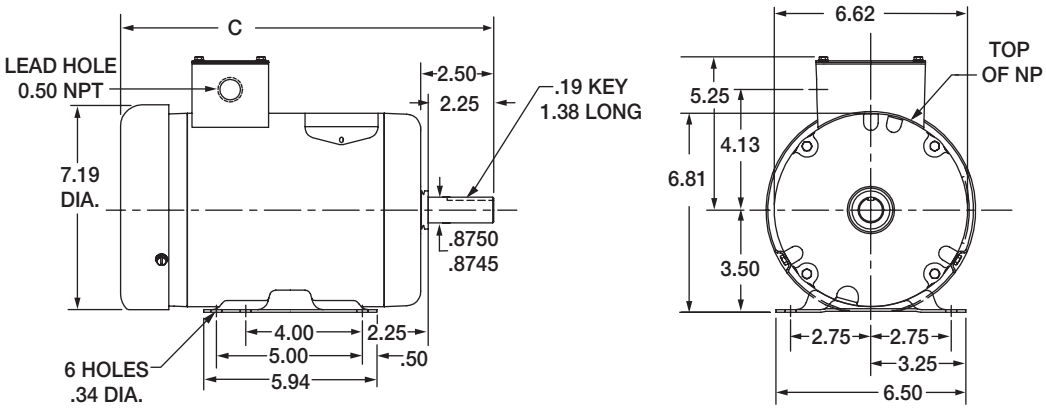

NOTE: Dimension for reference only. Contact a Baldor District Office or www.baldor.com for the detailed dimension drawing for your specific catalog number.

Dimension Drawings

Washdown Super-E

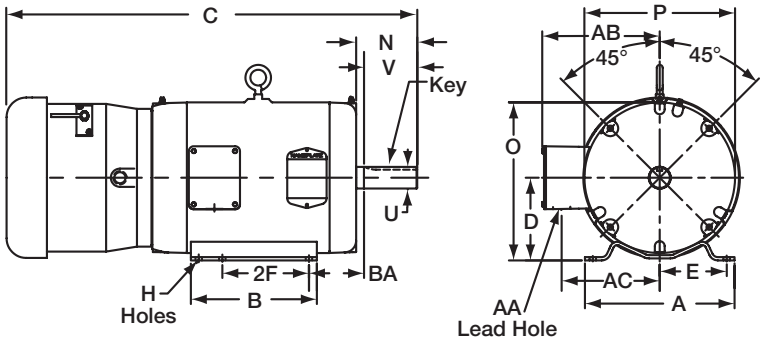

Washdown Super-E Brake Motor

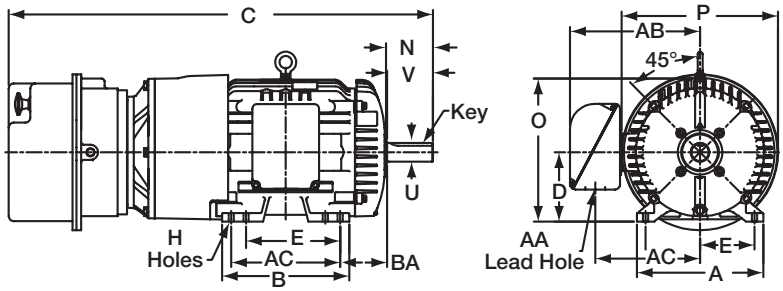

Washdown Baldor SmartMotor®
NEMA 143TC through 215TC

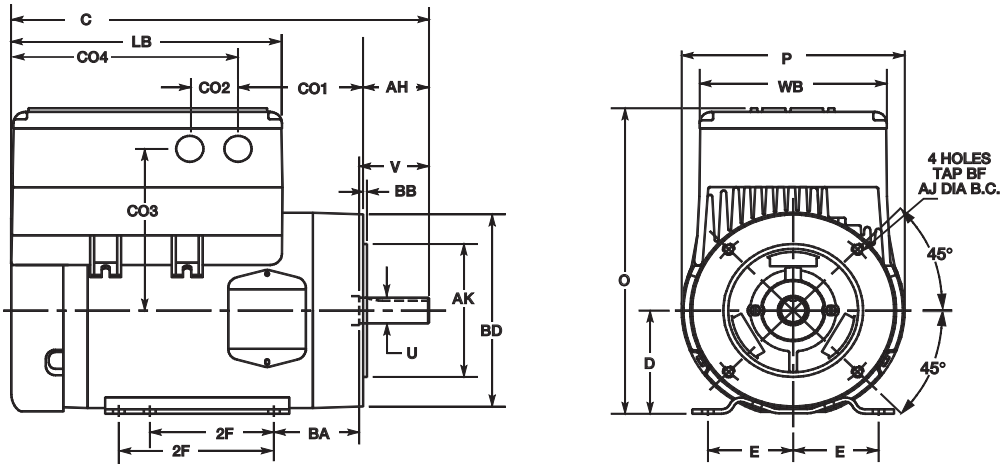

Model	Dimension																			
	2F	D	E	O	P	U	V	AH	AJ	AK	BA	BB	BD	BF	CO1	CO2	CO3	CO4	LB	WB
56C	3.00	3.50	2.44	10.36	7.18	0.6250	1.93	2.06	5.88	4.50	2.75	0.13	6.51	.38-16	4.03	1.38	5.48	7.307	8.73	6.03
143TC	4.00	3.50	2.75	10.35	7.20	0.8750	2.26	2.13	5.88	4.50	2.75	0.13	6.51	.38-16	4.03	1.38	5.48	7.307	8.71	6.03
145TC	5.00	3.50	2.75	10.35	7.20	0.8750	2.26	2.13	5.88	4.50	2.75	0.13	6.51	.38-16	4.03	1.38	5.48	7.307	8.71	6.03
182TC	4.50	4.50	3.75	11.92	8.86	1.125	2.75	2.87	7.25	8.50	3.50	0.25	8.86	.50-13	3.96	1.38	5.58	9.72	11.26	7.12
184TC	5.50	4.50	3.75	11.92	8.86	1.125	2.75	2.87	7.25	8.50	3.50	0.25	8.86	.50-13	5.46	1.38	5.58	9.72	11.26	7.12
213TC	5.50	5.25	4.25	13.69	10.62	1.375	3.37	3.37	7.25	8.50	4.25	0.25	9.04	.50-13	4.79	1.91	7.11	10.58	11.75	8.27
215TC	7.00	5.25	4.25	13.69	10.62	1.375	3.37	3.37	7.25	8.50	4.25	0.25	9.04	.50-13	4.74	1.91	7.11	10.58	11.75	8.27

NOTE: Dimension for reference only. Contact a Baldor District Office or www.baldor.com for the detailed dimension drawing for your specific catalog number.

Dimension Drawings

Washdown NEMA 56 through 256TC

TENV Enclosure

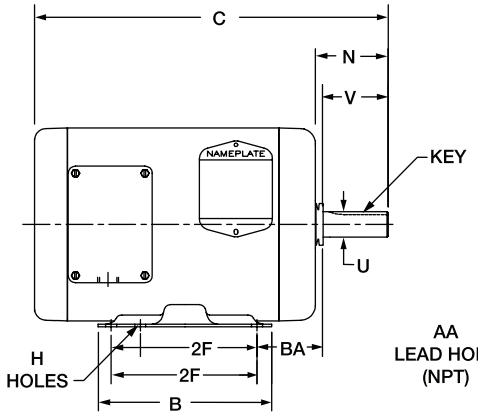

Base Mount

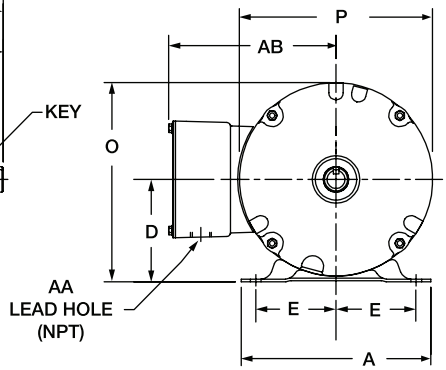

TEFC Enclosure

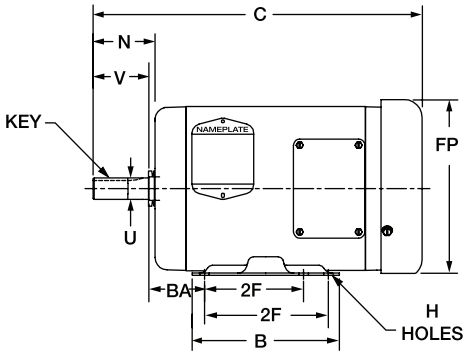

TENV Enclosure

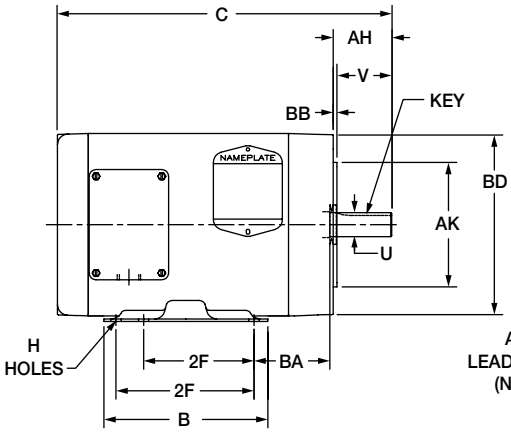

C-face with or without Base

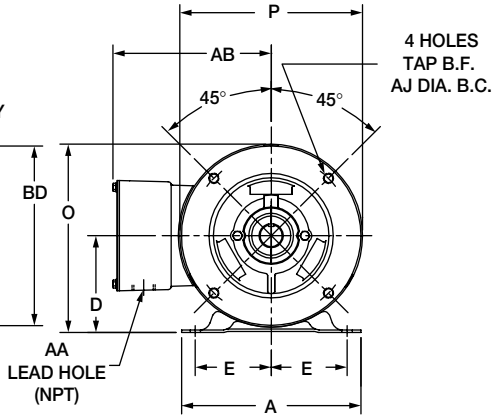

TEFC Enclosure

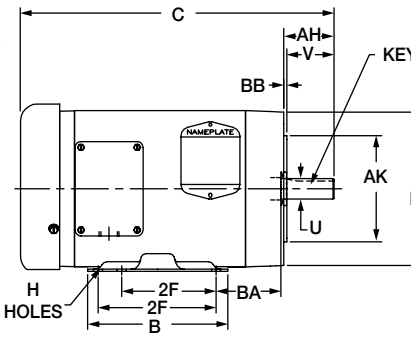

Catalog No. starting with “C” = C-face with base.
Catalog No. starting with “V” = C-face, no base.

NEMA Frame	A	B	D	E	2F	H	N	O	P	U	V	AA	AB	AH	AJ	BF TAP	AK	BA	BB	BD
56	6.50	4.50	3.50	2.44	3.00	0.34	2.44	6.81	6.62	0.625	1.88	0.50	5.22	-	-	3/8-16	-	2.75	-	-
56C	6.50	4.50	3.50	2.44	3.00	0.34	-	6.81	6.62	0.625	1.88	0.50	5.22	2.06	5.88	3/8-16	4.50	2.75	0.12	6.50
143T	6.50	5.94	3.50	2.75	4.00	0.34	2.50	6.81	6.62	0.875	2.25	0.50	5.22	-	-	3/8-16	-	2.25	-	-
143TC	6.50	5.94	3.50	2.75	4.00	0.34	-	6.81	6.62	0.875	2.25	0.50	5.22	2.12	5.88	3/8-16	4.50	2.75	0.12	6.50
145T	6.50	5.94	3.50	2.75	5.00	0.34	2.50	6.81	6.62	0.875	2.25	0.50	5.22	-	-	3/8-16	-	2.25	-	-
145TC	6.50	5.94	3.50	2.75	5.00	0.34	-	6.81	6.62	0.875	2.25	0.50	5.22	2.12	5.88	3/8-16	4.50	2.75	0.12	6.50
182T	8.63	6.50	4.50	3.75	4.50	0.41	3.56	8.44	7.88	1.125	2.75	0.75	5.97	-	-	1/2-13	-	2.75	-	-
182TC	8.63	6.50	4.50	3.75	4.50	0.41	-	8.44	7.88	1.125	2.75	0.75	5.97	2.62	7.25	1/2-13	8.50	3.50	0.25	8.89
184T	8.63	6.50	4.50	3.75	5.50	0.41	3.56	8.44	7.88	1.125	2.75	0.75	5.97	-	-	1/2-13	-	2.75	-	-
184TC	8.63	6.50	4.50	3.75	5.50	0.41	-	8.44	7.88	1.125	2.75	0.75	5.97	2.62	7.25	1/2-13	8.50	3.50	0.25	8.89
213T	9.50	8.00	5.25	4.25	5.50	0.41	3.88	10.03	9.56	1.375	3.37	0.75	7.46	-	-	1/2-13	-	3.50	-	-
213TC	9.50	8.00	5.25	4.25	5.50	0.41	-	10.03	9.56	1.375	3.37	0.75	7.46	3.12	7.25	1/2-13	8.50	4.50	0.25	9.04
215T	9.50	8.00	5.25	4.25	7.00	0.41	3.88	10.03	9.56	1.375	3.37	0.75	7.46	-	-	1/2-13	-	3.50	-	-
215TC	9.50	8.00	5.25	4.25	7.00	0.41	-	10.03	9.56	1.375	3.37	0.75	7.46	3.12	7.25	1/2-13	8.50	4.50	0.25	9.04
254TC	11.25	9.50	6.25	5.00	8.25	0.53	-	12.00	11.50	1.625	4.00	1.25	8.99	3.75	7.25	1/2-13	8.50	4.75	0.25	9.44
256TC	11.25	11.25	6.25	5.00	10.00	0.53	-	12.00	11.50	1.625	4.00	1.25	8.99	3.75	7.25	1/2-13	8.50	4.75	0.25	9.44

NOTE: Dimension for reference only. Contact a Baldor District Office or www.baldor.com for the detailed dimension drawing for your specific catalog number.

Dimension Drawings Series 5 Micro Inverters

1 Hp

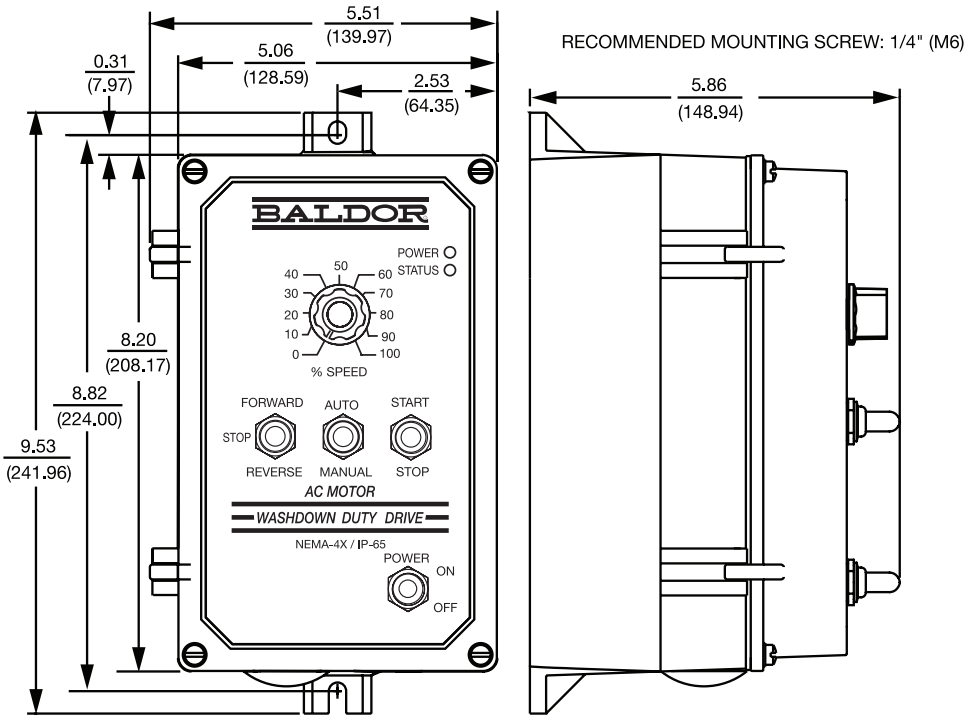

SHOWN WITH OPTIONAL AUTO/MANUAL AND FORWARD-STOP-REVERSE

2 thru 5 Hp

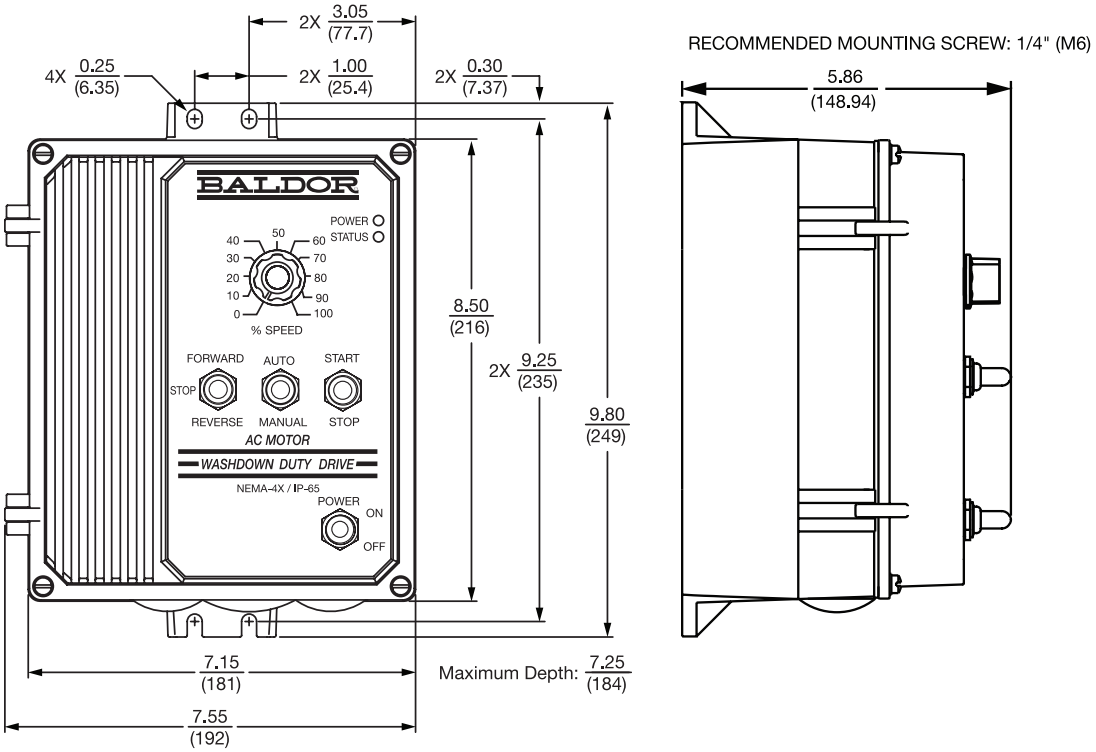

NOTE: Dimension for reference only. Contact a Baldor District Office or www.baldor.com for the detailed dimension drawing for your specific catalog number.

Dimension Drawings

Series 15H "General Purpose" Inverter
Series 18H Vector and Series 23H Servo Washdown Controls

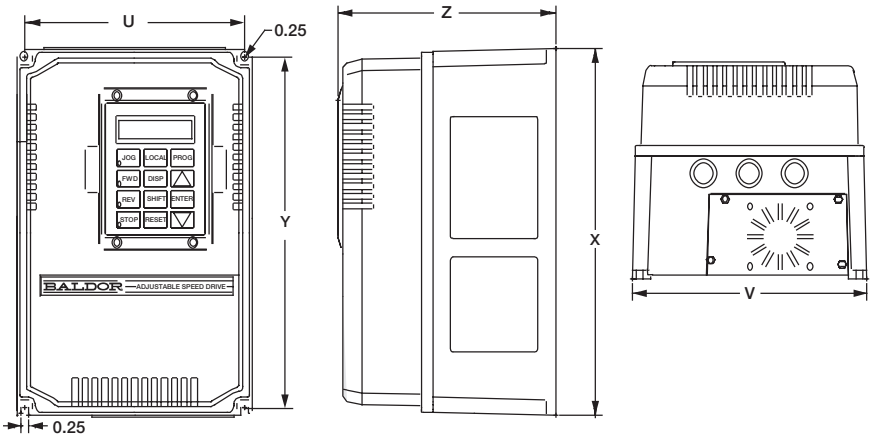

Dimensions in/(mm)

Size	Outside			Mounting		Ap'x
	Height	Width	Depth	Height	Width	Shpg. Wgt.
A	12.272/(312)	7.974/(203)	7.120/(181)	11.5/(292)	7.2/(183)	20
B	15.4/(391)	10/(254)	7.1/(180)	14.6/(371)	9.2/(234)	30

NOTE: Dimension for reference only. Contact a Baldor District Office or www.baldor.com for the detailed dimension drawing for your specific catalog number.

Remote Keypad Mounting for SmartMotor, 15H 18H and 23H

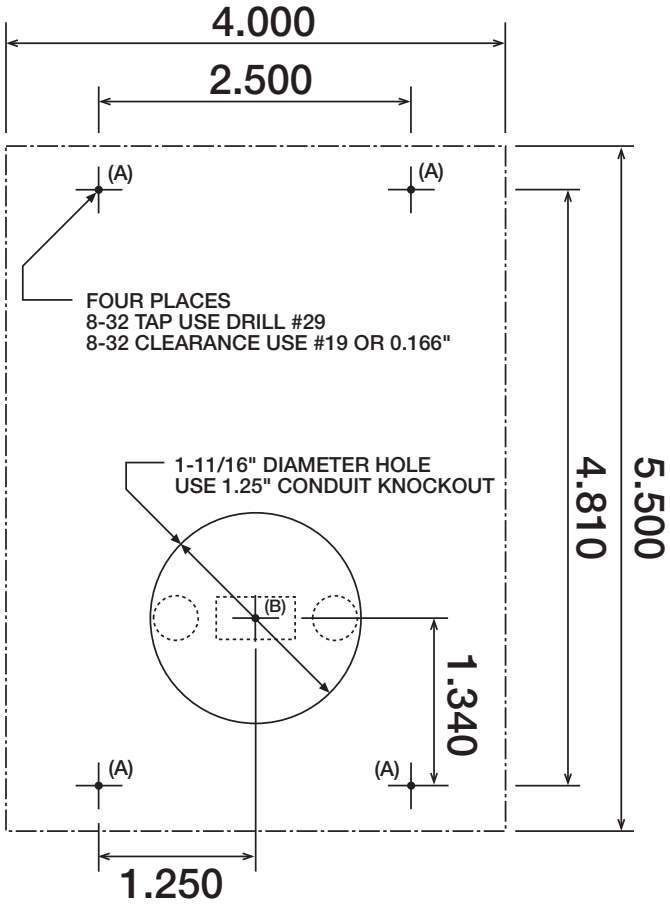

NOTE: Dimension for reference only. Contact a Baldor District Office or www.baldor.com for the detailed dimension drawing for your specific catalog number.

Dimension Drawings

Washdown DC Motors
NEMA 56C through 1810ATC

TENV 56C

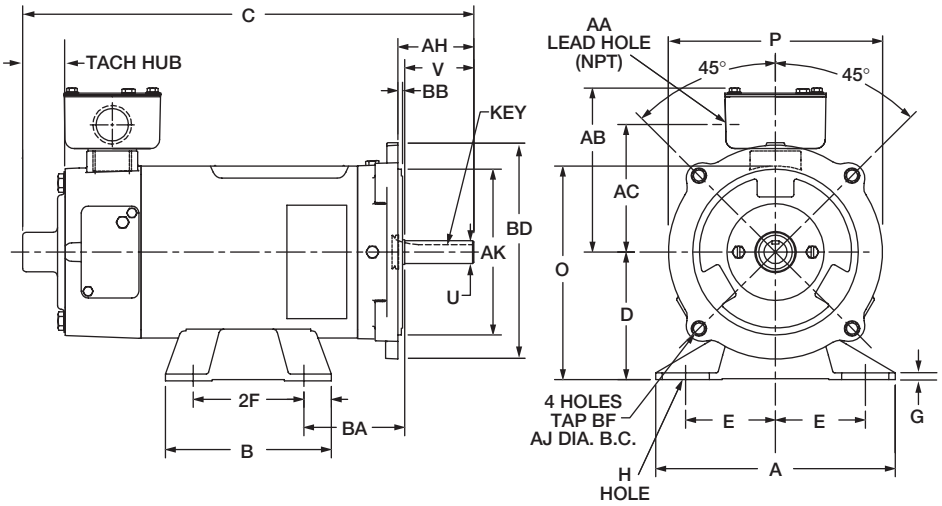

TEFC 56C, 143-5TC

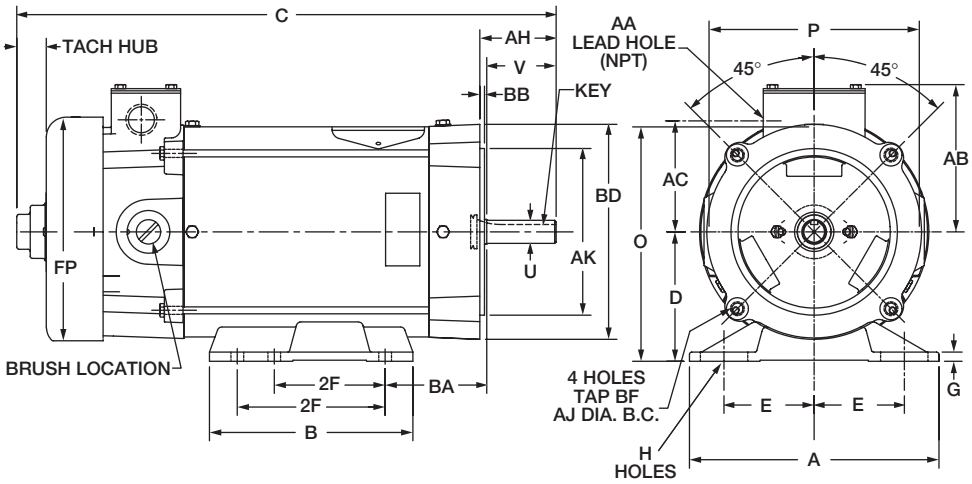

Paint free motors do not have tach adapter and hub extension on fan cover.

TEFC 184TC, 1810 ATC

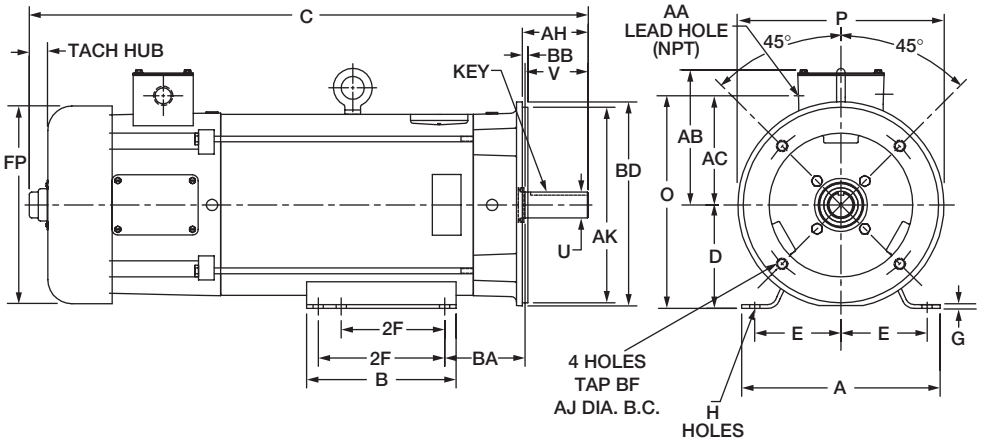

Dimension Drawings

Washdown DC Motors
NEMA 56C through 1810ATC

DC Motor Dim.			Tach* Hub	Foot Mounting					Pulley Shaft Dim.				Frame				
#	Encl.	NEMA Frame		BA	E	2F	G	H	U	V	KEY	AH	A	B	D	O	P
#1	TENV	56C	1.16	2.75	2.44	3.00	0.18	0.34	0.625	1.87	0.19	2.06	6.50	4.50	3.50	5.80	4.68
	TEFC	56C	0.80	2.75	2.44	3.00 or 4.00	0.25	0.34 Slot-(6)	0.625	1.87	0.19	2.06	6.75	5.50	3.50	6.34	5.69
#2	TEFC	143TC	0.80	2.75	2.75	4.00 or 5.00	0.125	0.38-(6)	0.875	2.25	0.19	2.12	6.50	5.94	3.50	6.81	6.63
	TEFC	145TC	0.80	2.75	2.75	4.00 or 5.00	0.125	0.38-(6)	0.875	2.25	0.19	2.12	6.50	5.94	3.50	6.81	6.63
#3	TEFC	184TC	0.80	2.75	3.75	4.50 or 5.50	0.15	0.41-(6)	1.125	2.75	0.25	2.62	8.63	6.50	4.50	10.38	7.88
	TEFC	1810ATC	0.80	2.75	3.75	4.50 or 5.50 or 11.00	0.15	0.41-(12)	1.125	2.75	0.25	2.62	8.63	13.00	4.50	10.38	7.88

NOTE: * Tach adaptability only on white Washdown motors.

DC Motor Dim.			Conduit Box								
#	Encl.	NEMA Frame	AA	AB	AC	AJ	AK	BB	BD	BF	FP
#1	TENV	56C	0.50	4.46	3.47	5.88	4.50	0.12	6.50	0.38-16(4)	—
#2	TEFC	56C	0.50	4.00	3.00	5.88	4.50	0.12	6.50	0.38-16(4)	6.20
	TEFC	143TC	0.50	4.25	3.38	5.88	4.50	0.12	6.50	0.38-16(4)	7.01
	TEFC	145TC	0.50	4.25	3.38	5.88	4.50	0.12	6.50	0.38-16(4)	7.01
#3	TEFC	184TC	0.50	5.88	4.75	7.25	8.50	0.25	8.87	0.50-13(4)	8.49
	TEFC	1810ATC	0.50	5.88	4.75	7.25	8.50	0.25	8.87	0.50-13(4)	8.49

NOTE: Dimension for reference only. Contact a Baldor District Office or www.baldor.com for the detailed dimension drawing for your specific catalog number.

NEMA 4X Washdown Duty DC SCR Controls

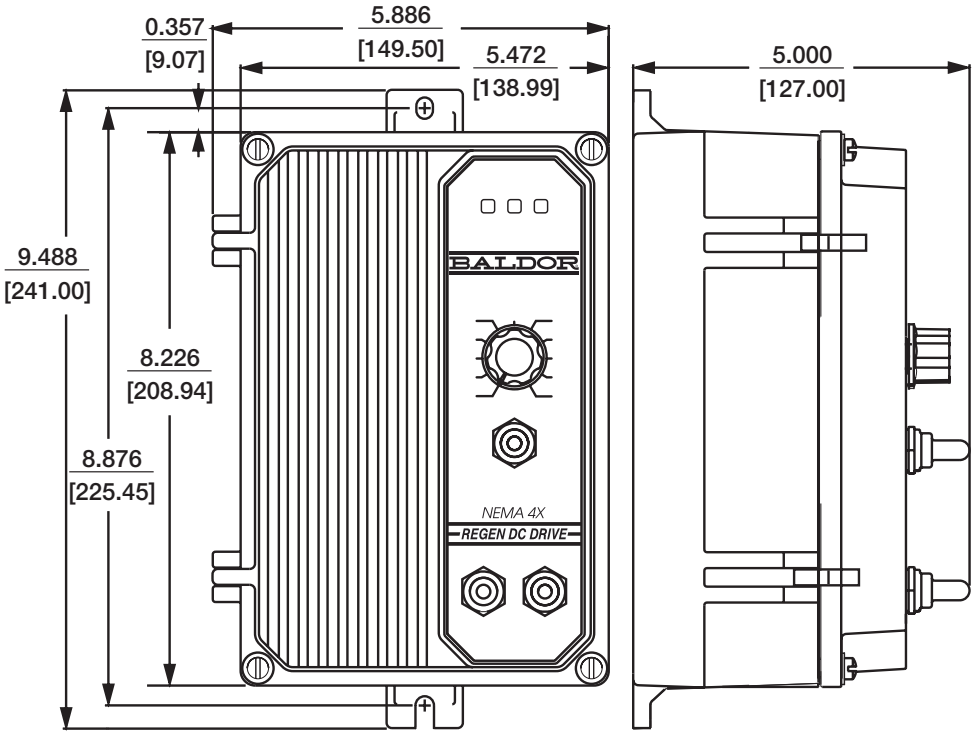

Dimension Drawings

Washdown Right Angle, Quill Type Gear Reducer

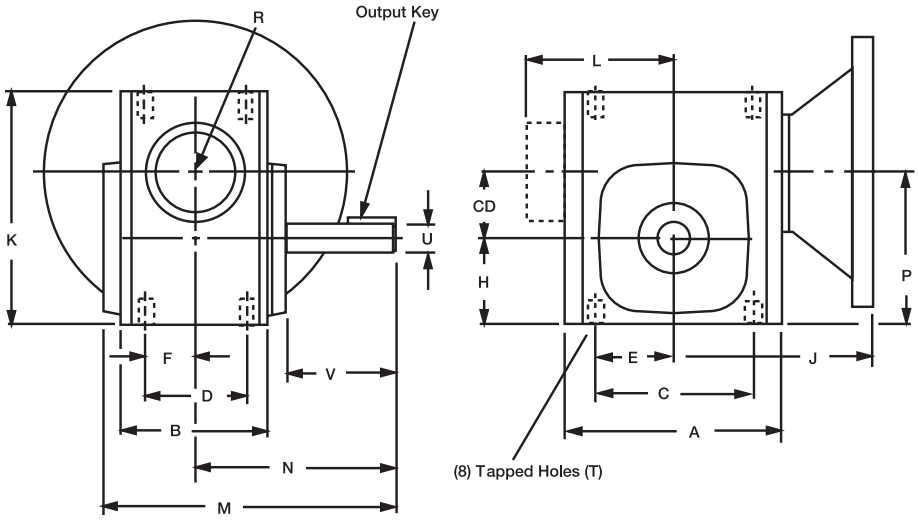

Size	C.D.	A	B	C	D	E	F	H	J 42CZ	J 56C 140TC	J 180TC	K	L Fan Guard	M	N	P	T Tap Size	T Depth
913	1.33	4.25	2.88	3.25	2.00	1.63	1.00	1.72	—	3.94	—	4.65	—	6.03	4.00	3.05	0.312-18	0.62
915	1.54	5.13	3.69	4.19	2.75	2.10	1.38	1.91	—	4.50	—	5.38	—	6.72	4.31	3.45	0.312-18	0.62
918	1.75	5.56	3.69	4.19	2.75	2.09	1.38	2.06	—	4.69	—	5.75	—	6.78	4.31	3.81	0.312-18	0.62
921	2.06	6.06	3.81	5.00	2.88	2.50	1.44	2.28	—	5.07	—	6.38	—	7.22	4.69	4.34	0.375-16	0.75
924	2.38	6.44	4.06	5.00	2.88	2.50	1.44	2.50	—	5.25	—	6.94	—	7.75	5.09	4.88	0.375-16	0.75
926	2.62	7.38	4.44	6.38	3.38	3.19	1.69	2.94	—	5.75	6.19	8.00	—	8.50	5.62	5.56	0.375-16	0.75
932	3.25	8.92	5.88	7.50	4.00	3.75	2.00	3.50	—	6.56	7.00	9.38	6.65	10.69	7.06	6.75	0.437-14	0.88

Size	Output Shaft U +0.000 -0.001	Output Shaft V	W-Key Sq.	W-Key Lgth.	Motor Size Available Per Size Any Ratio	Approximate Weight Lbs.	Approximate Oil Capacity oz.
913	0.625	2.19	0.188	1.000	B5, B7	13	6.5
915	0.750	2.06	0.188	1.000	B5	21	10.0
918	0.875	2.06	0.188	1.000	B5, B7	28	14.0
921	1.000	2.38	0.250	1.250	B5, B7	34	17.5
924	1.125	2.66	0.250	1.250	B5, B7, B9	40	26.5
926	1.125	2.78	0.250	2.000	B5, B7, B9	54	32.0
932	1.375	3.44	0.313	2.500	B5, B7, B9	87	67.0

Motor Information				
Worm Bore Size Desig.	NEMA Design	Bore +0.002 -0.000	Key Way	R
B4	42CZ *	0.500	0.125 x 0.063	2.16
B5	56C	0.625	0.187 x 0.093	3.31
B7	140TC/180C	0.875	0.187 x 0.093	3.31
B9	180TC/210C	1.125	0.250 x 0.125	4.63
B11	210TC/250UC	1.375	0.312 x 0.156	4.63

Assembly Types

Standard

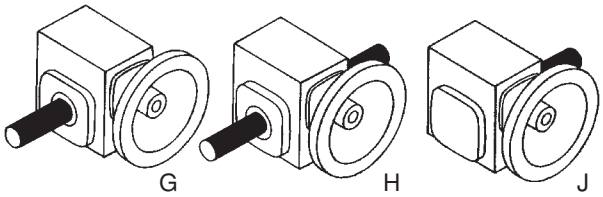

NOTE: * Has Keyway, Standard 42C has Flat

Dimension for reference only. Contact a Baldor District Office or www.baldor.com for the detailed dimension drawing for your specific catalog number.

Dimension Drawings

Stainless Steel Solid Shaft Gear Reducer

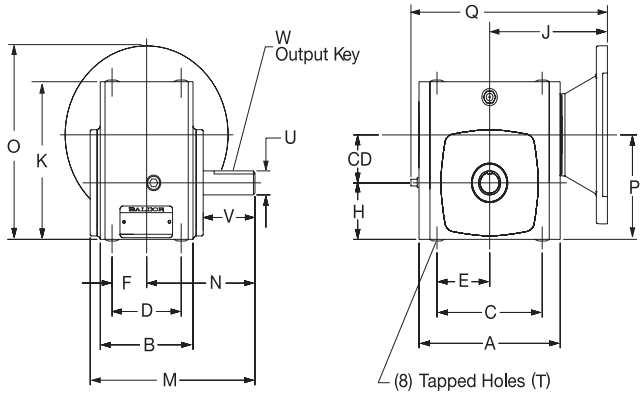

Size	C.D.	A	B	C	D	E	F	H	J		K	M	N	O		P
									56C 140TC	180TC				56C 140TC	180TC	
918	1.75	5.62	3.69	4.19	2.75	2.09	1.38	2.06	4.69	—	5.75	6.78	4.31	7.06	—	3.81
921	2.06	6.13	3.81	5.00	2.88	2.50	1.44	2.28	5.07	—	6.38	7.22	4.69	7.60	—	4.34
926	2.62	7.45	4.44	6.38	3.38	3.19	1.69	2.94	5.75	6.19	8.00	8.50	5.62	8.81	10.07	5.56

Size	Q		T		Output Shaft		W-Key		Motor Size Available Per Size Any Ratio	Approximate Weight Lbs.	Approximate Oil Capacity oz.
	56C 140TC	180TC	Tap Size	Depth	U +0.000 -0.001	V	Sq.	Lgth.			
918	7.85	—	0.312-18	0.59	0.875	2.06	0.188	1.00	B5, B7	30	14.0
921	8.63	—	0.375-16	0.69	1.000	2.38	0.250	1.25	B5, B7	38	17.5
926	9.90	10.34	0.375-16	0.69	1.125	2.78	0.250	2.00	B5, B7, B9	56	32.0

Stainless Steel Hollow Bore Gear Reducer

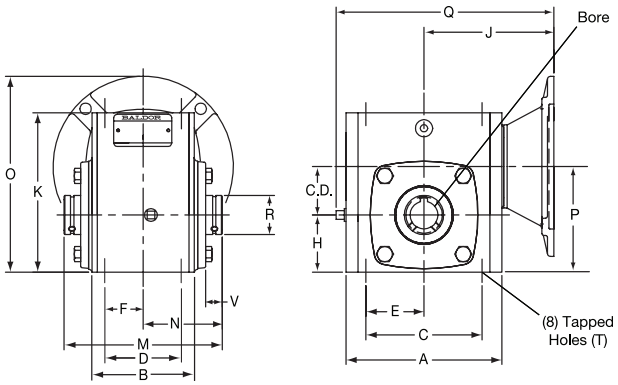

Size	C.D.	A	B	C	D	E	F	H	J		K	M	N	O		P
									56C 140TC	180TC				56C 140TC	180TC	
918	1.75	5.62	3.69	4.19	2.75	2.09	1.38	2.06	4.69	—	5.75	5.70	2.85	7.06	—	3.81
921	2.06	6.13	3.83	5.00	2.88	2.50	1.44	2.28	5.06	—	6.38	6.44	3.22	7.60	—	4.34
926	2.62	7.45	4.44	6.38	3.38	3.19	1.69	2.94	5.75	6.19	8.00	6.88	3.44	8.81	10.07	5.56

Size	Q		T		Output Shaft				W-Key		Motor Size Available Per Size Any Ratio	Approximate Weight Lbs.	Approximate Oil Capacity oz.
	56C 140TC	180TC	Tap Size	Depth	R	Bore Std.	Bore Max.	V	Sq.	Length			
918	7.85	—	0.312-18	0.59	1.42	1.000	1.125	.60	0.250	1.625	B5, B7	31	14.0
921	8.63	—	0.375-16	0.69	1.73	1.250	1.250	.63	0.250	1.625	B5, B7	36	17.5
926	9.90	10.34	0.375-16	0.69	2.56	1.438	2.000	.63	0.375	1.500	B5, B7, B9	59	32.0

Connection Diagrams – AC

CD0001

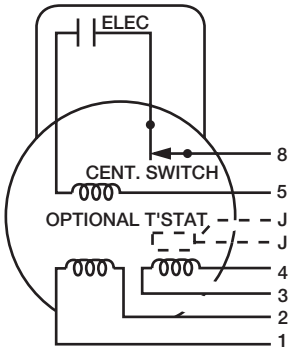

VOLT	↻	LINE A	LINE B	JOIN
HIGH	STD	1	4,5	2,3,8
HIGH	OPP	1	4,8	2,3,5
LOW	STD	1,3,8	2,4,8	–
LOW	OPP	1,3,8	2,4,8	–

CD0005

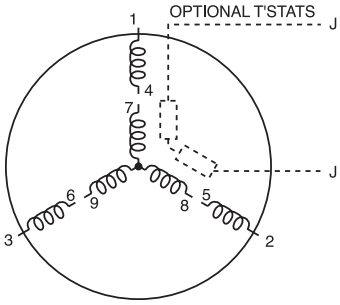

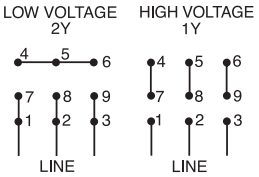

CD0006

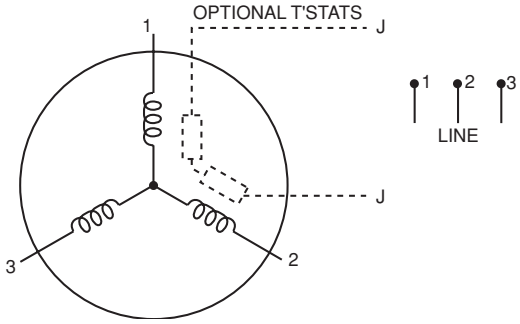

CD0016A01

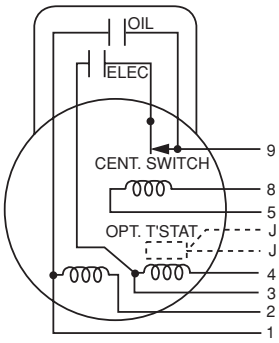

VOLT	↻	LINE A	LINE B	JOIN	JOIN
HIGH	STD	1	4,5	2,3	8,9
HIGH	OPP	1	4,8	2,3	5,9
LOW	STD	1,3	2,4,5	8,9	
LOW	OPP	1,3	2,4,8	5,9	

NOTE: Standard rotation is CCW facing end opposite drive extension.

Connection Diagrams – AC

CD0022

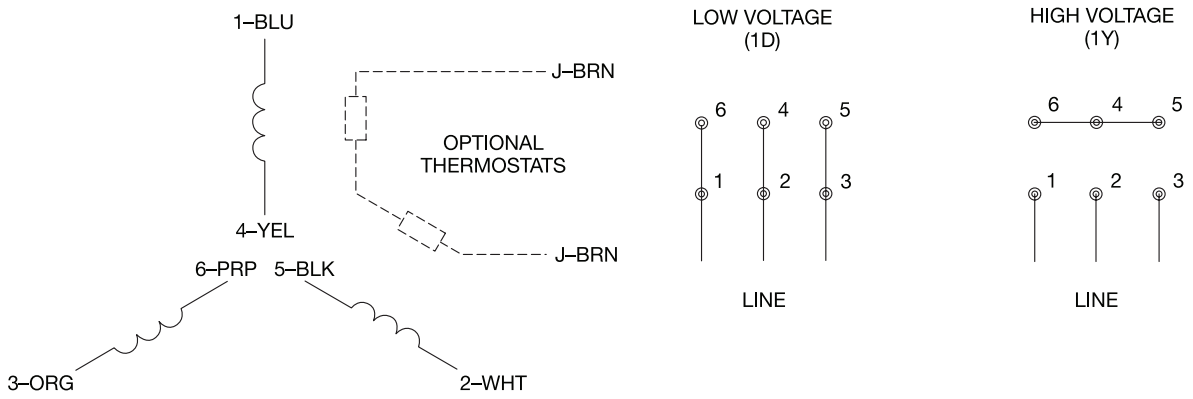

Connection Diagrams – DC

CD0194

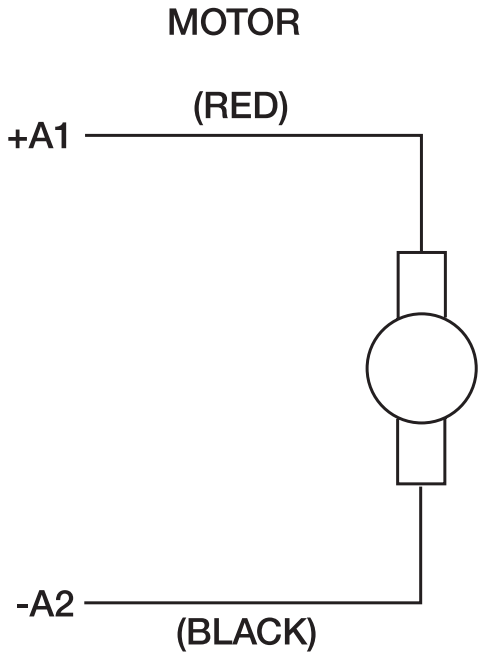

NOTE: Standard rotation is CCW facing end opposite drive extension.

Connection Diagrams – AC Servo Motors

STANDARD THREADED STYLE
MOTOR CONNECTOR – 8 PIN

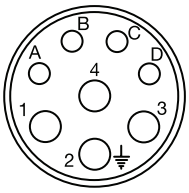

MOTOR CONNECTIONS

PIN	FUNCTION
A	THERMAL SWITCH
B	THERMAL SWITCH
C	BRAKE (OPTIONAL)
D	BRAKE (OPTIONAL)
1	MOTOR LEAD U
2	GROUND
3	MOTOR LEAD W
4	MOTOR LEAD V

STANDARD THREADED STYLE
RESOLVER CONNECTOR – 12 PIN

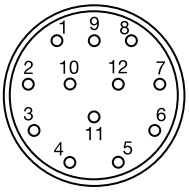

RESOLVER CONNECTIONS

PIN	FUNCTION
1	REF HI R1
2	REF LO R2
3	COS+ S1
4	COS– S3
5	SINE+ S2
6	SINE– S4
7 - 12	OPEN

STANDARD THREADED STYLE
ENCODER CONNECTOR – 16 PIN

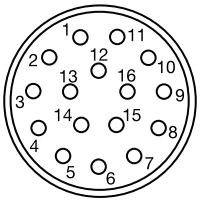

ENCODER CONNECTIONS

PIN	FUNCTION
1	DC +5V
2	GROUND
3	CHANNEL A
4	CHANNEL $\overline{A}$
5	CHANNEL B
6	CHANNEL $\overline{B}$
7	CHANNEL Z
8	CHANNEL $\overline{Z}$
9	OPEN
10	CHANNEL U
11	CHANNEL $\overline{U}$
12	CHANNEL V
13	CHANNEL $\overline{V}$
14	CHANNEL W
15	CHANNEL $\overline{W}$
16	OPEN

BALDOR

Contact your nearest Baldor District Office at these World Wide locations, or visit www.baldor.com

UNITED STATES

ARIZONA
PHOENIX
4211 S 43RD PLACE
PHOENIX, AZ 85040
PHONE: 602-470-0407
FAX: 602-470-0464

ARKANSAS
CLARKSVILLE
1001 COLLEGE AVE.
CLARKSVILLE, AR 72830
PHONE: 479-754-9108
FAX: 479-754-9205

CALIFORNIA
LOS ANGELES
6480 FLOTILLA
COMMERCE, CA 90040
PHONE: 323-724-6771
FAX: 323-721-5859

HAYWARD
21056 FORBES STREET
HAYWARD, CA 94545
PHONE: 510-785-9900
FAX: 510-785-9910

COLORADO
DENVER
2520 W BARBERRY PLACE
DENVER, CO 80204
PHONE: 303-623-0127
FAX: 303-595-3772

CONNECTICUT
WALLINGFORD
65 SOUTH TURNPIKE ROAD
WALLINGFORD, CT 06492
PHONE: 203-269-1354
FAX: 203-269-5485

FLORIDA
TAMPA/PUERTO RICO/ VIRGIN ISLANDS
3906 EAST 11TH AVENUE
TAMPA, FL 33605
PHONE: 813-248-5078
FAX: 813-247-2984

GEORGIA
ATLANTA
62 TECHNOLOGY DR.
ALPHARETTA, GA 30005
PHONE: 770-772-7000
FAX: 770-772-7200

ILLINOIS
CHICAGO
1601 FRONTENAC ROAD
NAPERVILLE, IL 60563
PHONE: 630-848-5100
FAX: 630-848-5110

INDIANA
INDIANAPOLIS
5525 W. MINNESOTA STREET
INDIANAPOLIS, IN 46241
PHONE: 317-246-5100
FAX: 317-246-5110
800-428-4141

IOWA
DES MOINES
1800 DIXON STREET, SUITE C
DES MOINES, IA 50316
PHONE: 515-263-6929
FAX: 515-263-6515

MARYLAND
BALTIMORE
6660 SANTA BARBARA RD.
SUITE 22-24
ELKRIDGE, MD 21075
PHONE: 410-579-2135
FAX: 410-579-2677

MASSACHUSETTS
BOSTON
6 PULLMAN STREET
WORCESTER, MA 01606
PHONE: 508-854-0708
FAX: 508-854-0291

MICHIGAN
DETROIT
33782 STERLING PONDS BLVD.
STERLING HEIGHTS, MI 48312
PHONE: 586-978-9800
FAX: 586-978-9969

GRAND RAPIDS
668 3 MILE ROAD NW
GRAND RAPIDS, MI 49504
PHONE: 616-785-1784
FAX: 616-785-1788

MINNESOTA
MINNEAPOLIS
21080 134TH AVE. NORTH
ROGERS, MN 55374
PHONE: 763-428-3633
FAX: 763-428-4551

MISSOURI
ST LOUIS
422 INDUSTRIAL DRIVE
MARYLAND HEIGHTS, MO 63043
PHONE: 314-298-1800
FAX: 314-298-7660

KANSAS CITY
1501 BEDFORD AVENUE
NORTH KANSAS CITY, MO 64116
PHONE: 816-587-0272
FAX: 816-587-3735

NEW YORK
AUBURN
ONE ELLIS DRIVE
AUBURN, NY 13021
PHONE: 315-255-3403
FAX: 315-253-9923

NORTH CAROLINA
GREENSBORO
1220 ROTHERWOOD ROAD
GREENSBORO, NC 27406
P O BOX 16500
GREENSBORO, NC 27416
PHONE: 336-272-6104
FAX: 336-273-6628

OHIO
CINCINNATI
2929 CRESCENTVILLE ROAD
WEST CHESTER, OH 45069
PHONE: 513-771-2600
FAX: 513-772-2219

CLEVELAND
8929 FREEWAY DRIVE
MACEDONIA, OH 44056
PHONE: 330-468-4777
FAX: 330-468-4778

OKLAHOMA
TULSA
2 EAST DAWES
BIXBY, OK 74008
PHONE: 918-366-9320
FAX: 918-366-9338

OREGON
PORTLAND
20393 SW AVERY COURT
TUALATIN, OR 97062
PHONE: 503-691-9010
FAX: 503-691-9012

PENNSYLVANIA
PHILADELPHIA
1035 THOMAS BUSCH MEMORIAL HIGHWAY
PENNSAUKEN, NJ 08110
PHONE: 856-661-1442
FAX: 856-663-6363

PITTSBURGH
616H BEATTY ROAD
MONROEVILLE, PA 15146
PHONE: 412-380-7244
FAX: 412-380-7250

TENNESSEE
MEMPHIS
4000 WINCHESTER ROAD
MEMPHIS, TN 38118
PHONE: 901-365-2020
FAX: 901-365-3914

TEXAS
HOUSTON
4647 PINE TIMBERS
SUITE # 135
HOUSTON, TX 77041
PHONE: 713-895-7062
FAX: 713-690-4540

DALLAS
3040 QUEBEC
DALLAS, TX 75247
PHONE: 214-634-7271
FAX: 214-634-8874

UTAH
SALT LAKE CITY
2230 SOUTH MAIN STREET
SALT LAKE CITY, UT 84115
PHONE: 801-832-0127
FAX: 801-832-8911

WISCONSIN
MILWAUKEE
2725 SOUTH 163RD STREET
NEW BERLIN, WI 53151
PHONE: 262-784-5940
FAX: 262-784-1215

INTERNATIONAL SALES
FORT SMITH, AR
P.O. BOX 2400
FORT SMITH, AR 72902
PHONE: 479-646-4711
FAX: 479-648-5895

CANADA
EDMONTON, ALBERTA
4053-92 STREET
EDMONTON, ALBERTA T6E 6R8
PHONE: 780-434-4900
FAX: 780-438-2600

OAKVILLE, ONTARIO
2750 COVENTRY ROAD
OAKVILLE, ONTARIO L6H 6R1
PHONE: 905-829-3301
FAX: 905-829-3302

MONTREAL, QUEBEC
1844 WILLIAM STREET
MONTREAL, QUEBEC H3J 1R5
PHONE: 514-933-2711
FAX: 514-933-8639

VANCOUVER, BRITISH COLUMBIA
1538 KEBET WAY
PORT COQUITLAM, BC V3C 5M5
PHONE 604-421-2822
FAX: 604-421-3113

WINNIPEG, MANITOBA
54 PRINCESS STREET
WINNIPEG, MANITOBA R3B 1K2
PHONE: 204-942-5205
FAX: 204-956-4251

AUSTRALIA
UNIT 3, 6 STANTON ROAD
SEVEN HILLS, NSW 2147,
AUSTRALIA
PHONE: (61) (2) 9674 5455
FAX: (61) (2) 9674 2495

UNIT 8, 5 KELLETTS ROAD
ROWVILLE, VICTORIA, 3178
AUSTRALIA
PHONE: (61) (3) 9753 4355
FAX: (61) (3) 9753 4366

AMÉRICA DEL SUR
APTDO. 9109 0818 ZONA 6
BETHANIA,
CIUDAD DE PANAMÁ, PANAMÁ
PHONE: +507 261-5347
FAX: +507 261-5355

CENTRO AMÉRICA Y CARIBE
RESIDENCIAL PINARES DE SUIZA
POL. 15 #44,
NVA. SAN SALVADOR,
EL SALVADOR
PHONE: +503 2288-1519
FAX: +503 2288-1518

CHINA
SHANGHAI JIAHUA
BUSINESS CENTER
ROOM NO. A-8421
808 HONG QIAO ROAD
SHANGHAI 200030
PHONE: 86-21-64473060
FAX: 86-21-64078620

GERMANY
DIESELSTRASSE 22
D-85551 KIRCHHEIM
MUNICH, GERMANY
PHONE: (49) (89) 90508 0
FAX: (49) (89) 90508 492

INDIA
14, COMMERCE AVENUE
MAHAGANESH COLONY
PAUD ROAD
PUNE - 411 038
MAHARASHTRA, INDIA
PHONE: 91 20 25 45 95 30
FAX: 91 20 5 4 95 30

ITALY
BALDOR ASR AG
SUCCURSALE DI MENDRISIO
VIA BORROMINI, 20A
CH-6850 MENDRISIO
SWITZERLAND
PHONE: 41 91 640 9952
FAX: 41 91 630 2633

JAPAN
DIA BLDG 802,
2-21-1 TSURUYA-CHO,
KANAGAWA-KU
YOKOHAMA, 221-0835, JAPAN
PHONE: 81-45-412-4506
FAX: 81-45-412-4507

KOREA
ROOM 208-37
INCHEON INDUSTRIAL GOODS
CIRCULATING CENTER
SONGHYEON 3-DONG, DONG-GU
INCHEON. KOREA, 401-705
PHONE: 82 32 588 3253
FAX: 82 32 588 3254

MÉXICO
KM. 2.0 BLVD. AL AEROPUERTO
LEÓN 37545, GUANAJUATO,
MÉXICO
PHONE: 52 477 761 2030
FAX: 52 477 761 2010

MIDDLE EAST & NORTH AFRICA
VSE INTERNATIONAL CORP.
3233 NORTH ARLINGTON HEIGHTS
SUITE 100W
ARLINGTON HEIGHTS, IL 60004
PHONE: 847 590 5547

SINGAPORE
51 KAKI BUKIT ROAD 2
K B WAREHOUSE COMPLEX
SINGAPORE 417863
PHONE: (65) 6 744 2572
FAX: (65) 6 747 1708

SWITZERLAND
POSTFACH 73
SCHUTZENSTRASSE 59
CH-8245 FEUERTHALEN
SWITZERLAND
PHONE: (41) (52) 6474700
FAX: (41) (52) 6592394

TAIWAN
4F, NO. 25, SEC. 1,
TUNHUA S ROAD,
TAIPEI 10557, TAIWAN, R.O.C.
PHONE: (886-2) 2577-4352
FAX: (886-2) 2577-4157

UNITED KINGDOM
6 BRISTOL DISTRIBUTION PARK
HAWKLEY DRIVE
BRISTOL BS32 0BF U.K.
PHONE: 44 1454 859000
FAX: 44 1454 8590019

Baldor Electric Company
P.O. Box 2400
Fort Smith, AR 72902-2400 U.S.A.
Ph (479) 646-4711 • Fax (479) 648-5792
International Fax (479) 648-5895
www.baldor.com

BR455

Printed in U.S.A.
1/06 PROG 25,000